Global Footprint

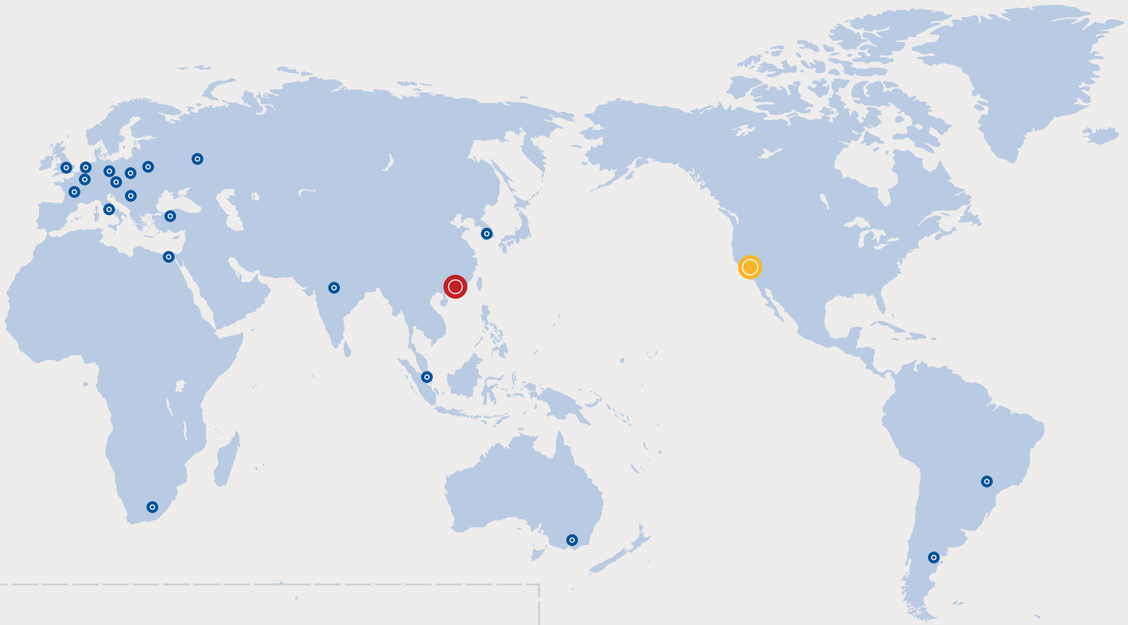

Headquarters
Leadshine Technology Co., Ltd.

Address: Floor 11, Block A3, iPark NO. 1001 Xueyuan Blvd.
Nanshan District Shenzhen, Guangdong
518055 China
Tel: +86-755-26411692
Fax: +86-755-2640 2718
Website: www.leadshine.com
Emails: sales@leadshine.com(Sales)
tech@leadshine.com(Technical Support)

North America Office
Leadshine America, Inc.

Address: 26050 Towne Centre Dr.
Foothill Ranch, CA 92610 USA
Tel: 1-949-608-7270
Fax: 1-949-638-7298
Website: www.Leadshineusa.com
Email: sales@leadshineusa.com(Sales)
support@leadshineusa.com(Technical Support)

© 2022 by Leadshine Technology. All Rights Reserved

Leadshine
Stock code: 002979

SERVO PRODUCTS

AC Servo Systems
DC Servo Systems
Integrated Servo Motors
Reserved Products
Power Supplies

Your Reliable Motion Control Partner

Leading Technology, Shining Value | *www.leadshine.com*

Company Profile

Founded in 1997 by Warren Li, a MIT PhD graduate.

Leadshine Technology Co., Ltd. is a leading technology company dedicated to designing, manufacturing, marketing, affordable high performance motion control products based on the latest control technologies.

Our products include stepper and closed loop stepper motors & AC servo drives & motors, integrated stepper & servo motors, motion controllers, motion PLCs, etc.

Today, Leadshine is a publicly listed company(stock code002979)with over 1,000 employees and 4 manufacturing facilities in China. We are the largest stepper product manufactures in China, and serve 10,000+ OEM clients from 60+ countries and in tens of industries.

Leadshine Shenzhen Headquarter

Shanghai Intelligent Industry Park

Production base in Shenzhen

R&D

Led by Dr. Li, a PhD majored in robotics & servo controls from MIT, Leadshine has one of the strongest R&D teams in the motion control industry.

The team consists of more than 100 R&D engineers and all of them are highly educated with most of them carry PhD & Master degrees in controls, electrical & electronics engineering, mechanical engineering, mechatronics, computer engineering, and computer science.

Their strong background and experience allow Leadshine capable of designing superior quality products based the latest technology in the most efficient way.

Product Quality

Leadshine operates manufacturing facilities which are superiorly equipped, professionally staffed, and ISO-9001 certified.

That allows Leadshine to provide highly reliable quality motion control products OEM clients in the shortest time.

Leadshine's products have proven records of being successfully adopted in thousands of applications such as CNC routers, mills, plasmas, lathes, laser cutters/engravers/markers,

inkjet printers, plotters, electronics equipments, medical equipments, semiconductor assembly & inspection machines, electronics machines, packaging equipments, textile machines,

robotics, pick-and-place devices, etc. In most cases, Leadshine's standard "off-the-shelf" products are able to satisfy the motion control needs for most applications.

For many OEM applications with special requirements, Leadshine also offers customized products with optimized performance.

Support and Service

Leadshine believes the key to be a successful motion product supplier is the commitment to fully understanding our customer's applications and working closely with our OEM clients.

In many cases, Leadshine engineers can participate in the whole process of client product development, including initial application evaluation, product selection, design help & suggestion.

Our expertise and experience allow us to help OEM clients to produce competitive high quality machines in their industries.

Milestone

- **1997** Leadshine Technology Co., Ltd. was Founded
- **1999** Released the First Stepper Drive
- **2005** Launched the First Low Noise Stepper Drive in China
- **2008** Released the DM Series Digital Stepper Drives
- **2010** Successfully Launched a Motion Control IC
- **2011** Launched the First Hybrid Servo Drive in China
- **2013** Launched EL5 Series AC Servo Systems
- **2016** Developed the First EtherCAT and RTEX Stepper Drives in China
- **2018** Launched EtherCAT Closed-loop Stepper Systems
- **2019** Launched ELP Series Advanced AC Servo Systems
- **2020** Became IPO-listed Company with Stock Code: 002979

Why Leadshine

- Top Global Stepper Supplier
- Innovation over 25 years
- Complete Stepper and Servo Product Line
- ISO 9001:2005 Certification
- Excellent Product Quality
- Proven Product Reliability
- Global Sales & Service Network

Over 20,000,000 installed axes worldwide since 1997

Industry Applications

Electronic manufacturing equipment

Dispensing machine | Screw locking machine
SMT | Wire stripping machine
Lithium battery equipment

Laser machine industry

Laser marking machine | Laser cutting machine
Jade carving machine | Wood carving machine

Special machine tool industry

CNC machine | Die stamping machine

AGV logistics industry

Warehouse robot | Sorting robot
Cross belt sorter | Inclined guide wheel sorter
Multi-layer shuttle

Textile and garment industry

Computer cutting plotter | Template cutting machine
Garment proofing machine | Pattern cutting machine
Vertical jet cutting machine

Industrial robots

Multi-joint industrial robot | SCARA robot
Injection molding robot | Stamping robot

Contents

AC Servo Systems

EL6 Series AC Servo Drives ---------- 10
ELP Series AC Servo Drives ---------- 20
EL7 Series AC Servo Drives (New) ---------- 26
2EL7 Series AC Servo Drives (New) ---------- 33
EL8 Series AC Servo Drives (Coming Soon) ---------- 38
ELM Series AC Servo Motors ---------- 39
Accessories ---------- 48

DC Servo Systems

ELD2 Series DC Servo Drives ---------- 53
2ELD2 Series DC Servo Drives (New) ---------- 57
ELVM Series DC Servo Motors (New) ---------- 60

Integrated Servo Motors

iSV2 Series Integrated Servo Motors ---------- 63
iSV Series Integrated Servo Motors ---------- 69

Power Supplies

Power Supplies ---------- 71

Product Overview

EL6 AC Servo Systems

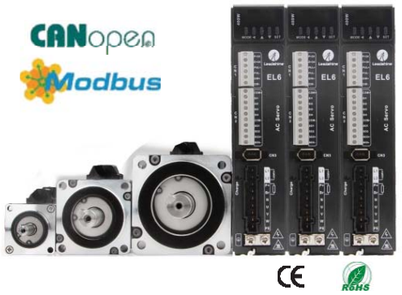

Position Mode

Power Range: 100W - 1.0kW
Voltage Input: 220VAC 1ph input
Motor: 40-130mm frame size with 17bit/23bit encoder
Features:
- Automatic motor identification
- Notch filter, Damping filter

Command source:
- Pulse+Direction / Modbus RTU / CANopen
- 16 PR paths

Inputs and Outputs:
- MAX Pulse input: 500 kHz
- 4 programmable digital inputs
- 3 programmable digital outputs
- Encoder ABZ output

ELP AC Servo Systems

Position Mode
Velocity Mode
Torque Mode

Power Range: 100W - 2.0kW
Voltage Input: 220VAC 1/3ph input
Motor:
40-180mm frame size with 17bit/23bit encoder
Command source:
- Pulse+Direction / Analog input / Modbus RTU / EtherCAT
- 16 PR paths

Inputs and Outputs:
- MAX Pulse input: 500 kHz
- 9 programmable digital inputs
- 6 programmable digital outputs
- Encoder ABZ output
- 1 analog input: -10V to +10V

EL7 AC Servo Systems

Position Mode
Velocity Mode
Torque Mode

Power Range: 750W - 7.5kW
Voltage Input: 380VAC 3-phase input
Motor:
40-180mm frame size with 17bit/23bit encoder
Features:
- Bandwidth of velocity loop up to 3.2kHz
- Automatic motor identification
- Notch filter, damping filter

Command source:
- Pulse+Direction / EtherCAT / Profinet

Inputs and Outputs:
- MAX Pulse input: 500 kHz
- 4 programmable digital inputs
- 3 programmable digital outputs
- Encoder A/B/Z-phase output, OC Z-phase output

2EL7 AC Servo Systems

Position Mode
Velocity Mode
Torque Mode

Power Range: 200W - 1kW
Voltage Input: 220VAC 1/3-phase input
Motor:
40-180mm frame size with 17bit/23bit encoder
Features:
- Bandwidth of velocity loop up to 3.2kHz
- Automatic motor identification
- Notch filter, damping filter

Command source:
- Analog Input / EtherCAT

Inputs and Outputs:
- 8 programmable digital inputs
- 3*2 programmable digital outputs
- Encoder A/B/Z-phase output, OC Z-phase output
- STO

ELD2 DC Servo Systems

Position Mode
Velocity Mode
Torque Mode

Power Range: 50W - 2.5kW
Voltage Input: 24~70VDC
Motor: 40-130mm frame size
Encoder: 1000 ppr, 2500 ppr, 17bit, 23bit
Features:
- Up to 180Amp(127Arms)
- 3rd Party brushless or brushed motor compatible
- STO and Logic Power
- 24VDC Power for Brake

Command source:
- Pulse+Direction / Analog input / Modbus RTU / CANopen
- 16 PR paths

Inputs and Outputs:
- 2 fast pulse input, 5V only
- 4 programmable digital inputs
- 2 programmable digital outputs
- Encoder AB output
- 1 analog input: -10V to +10V

2ELD2 DC Servo Systems

Position Mode
Velocity Mode
Torque Mode

Power Range: Each axis 50W - 1.2kW
Voltage Input: 24~70VDC
Motor: 40- 80mm frame size
Encoder: 1000 ppr, 2500 ppr, 17bit, 23bit
Features:
- Dual-axis, each axis current range up to 90Amp(64Arms)
- 3rd Party brushless or brushed motor compatible
- STO and Auxiliary input power
- Direct control of brake
- Save Mounting Space

Command source:
- Pulse+Direction / Analog input / Modbus RTU / CANopen
- 16 PR paths

Inputs and Outputs:
- MAX Pulse input: 500 kHz
- 4 programmable digital inputs
- 2 programmable digital outputs
- 1 analog input: -10V to +10V

iSV2 Integrated Servo Motors

Position Mode
Velocity Mode
Torque Mode

Power Range: 200W, 400W, 750W
Voltage Input: 24~60VDC
Motor Frame Size: 60mm, 80mm
Encoder: 17bit incremental encoder
Features:
- Highly Intergrated
- IP65 optional
- Save Mounting Space

Command source:
- Pulse+Direction / Modbus RTU / CANopen

Inputs and Outputs:
- MAX Pulse input: 500 kHz
- 4 programmable digital inputs
- 2 programmable digital outputs

iSV Integrated Servo Motors

Position Mode

Power Range: 90W, 130W, 180W
Voltage Input: 24~50VDC
Motor Frame Size: 57mm
Encoder: 1000-Line, 16bit
Features:
- Highly Intergrated
- Easy tuning, flexible to control
- Save Mounting Space

Command source:
- Pulse+Direction

Inputs and Outputs:
- 1 programmable digital outputs

Leadshine Servo Products Quick Selection

Servo Drive	Model	Power (W)	Voltage (VAC)	Dimensions (mm)	Weight (Kg)	Command Source					STO	Encoder Output	Brake Output	Inputs	Outputs	Matched Motor
						Pulse+Dir	Analog Input	RS485	EtherCAT	CANopen						
AC Servo Drive EL6 Series	EL6-D400Z	400	1 Phase 220	175*156*40	0.9	√								4 Points	3 Points	ELM Servo Motor
	EL6-RS400Z					√		√				√		4 Points	3 Points	
	EL6-CAN400Z									√				4 Points	3 Points	
	EL6-D750Z	750		175*156*50	1.1	√								4 Points	3 Points	
	EL6-RS750Z					√		√				√		4 Points	3 Points	
	EL6-CAN750Z									√				4 Points	3 Points	
	EL6-D1000Z	1000		175*156*50	1.2									4 Points	3 Points	
	EL6-RS1000Z					√						√		4 Points	3 Points	
	EL6-CAN1000Z					√		√		√				4 Points	3 Points	
AC Servo Drive ELP Series	ELP-D400Z	400	1 Phase 220	175*156*40	0.9	√						√		9 Points	6 Points	
	ELP-RS400Z					√	√	√				√		9 Points	6 Points	
	ELP-EC400S								√			√		14 Points	6 Points	
	ELP-D750Z	750		175*156*50	1.1	√						√		9 Points	6 Points	
	ELP-RS750Z					√	√	√				√		9 Points	6 Points	
	ELP-EC750S								√			√		14 Points	6 Points	
	ELP-D1000Z	1000		175*156*50	1.2	√						√		9 Points	6 Points	
	ELP-RS1000Z					√	√	√				√		9 Points	6 Points	
	ELP-EC1000S								√			√		14 Points	6 Points	
	ELP-RS1500Z	1500	1/3 Phase 220	175*156*80	2.3	√	√	√				√		9 Points	6 Points	
	ELP-EC1500Z								√			√		14 Points	6 Points	
	ELP-RS2000Z	2000		175*156*80	2.3	√	√	√				√		9 Points	6 Points	
	ELP-EC2000Z								√			√		14 Points	6 Points	
AC Servo Drive EL7 Series	EL7-EC750T3	750	3 Phase 380	55*175*179	1.3	√			√			√		4 Points	3 Points	
	EL7-EC1000T3	1000				√			√			√		4 Points	3 Points	
	EL7-EC1500T3	1500				√			√			√		4 Points	3 Points	
	EL7-EC2000T3	2000		80*175*179	1.9	√			√			√		4 Points	3 Points	
	EL7-EC3000T3	3000				√			√			√		4 Points	3 Points	
	EL7-EC4400T3	4400		90*250*230	3.3	√			√			√		4 Points	3 Points	
	EL7-EC5500T3	5500				√			√			√		4 Points	3 Points	
	EL7-EC7500T3	7500				√			√			√		4 Points	3 Points	
AC Servo Drive 2EL7 Series	2EL7-EC200S	200+200	1/3 Phase 220	55*175*186	1.1		√		√		√	√		8 Points	3 Points*2	
	2EL7-EC400S	400+400					√		√		√	√		8 Points	3 Points*2	
	2EL7-EC750S	750+750		80*175*186	1.4		√		√		√	√		8 Points	3 Points*2	
	2EL7-EC1000S	1000+1000					√		√		√	√		8 Points	3 Points*2	

Servo Drive	Model	Power (W)	Main Voltage (VDC)	Auxiliary Power (VDC)	Dimensions (mm)	Weight (Kg)	Command Source					*STO	Encoder Output	Brake Output	Inputs	Outputs	Matched Motor
							Pulse+Dir	Analog Input	RS485	EtherCAT	CANopen						
DC Servo Drive ELD2/2ELD2 Series	ELD2-RS7005	100	24-70	-	118*75.5*25.5	0.2	√	√	√						4 Points	2 Points	*ELVM Servo Motor *3rd Party Brushless /Brushed Motor
	ELD2-CAN7005B				140*79.5*25.5	0.3					√			√	4 Points	2 Points	
	ELD2-RS7010	400			118*75.5*25.5	0.2	√	√	√				√		4 Points	2 Points	
	ELD2-CAN7010B				140*79.5*25.5	0.3					√		√	√	4 Points	2 Points	
	ELD2-RS7015B	600			175*100.5*31	0.7	√	√	√				√	√	4 Points	2 Points	
	ELD2-CAN7015B					0.7					√		√	√	4 Points	2 Points	
	ELD2-RS7020B	750				0.7	√	√	√				√	√	4 Points	2 Points	
	ELD2-CAN7020B					0.7					√		√	√	4 Points	2 Points	
	ELD2-RS7030B	1200				0.7	√	√	√				√	√	4 Points	2 Points	
	ELD2-CAN7030B					0.7					√		√	√	4 Points	2 Points	
	ELD2-RS7040B	1500		24-70	194*103*41	0.9	√	√	√			√	√	√	4 Points	2 Points	
	ELD2-CAN7040B					0.9					√	√	√	√	4 Points	2 Points	
	ELD2-RS7060B	2500				0.9	√	√	√			√	√	√	4 Points	2 Points	
	ELD2-CAN7060B					0.9					√	√	√	√	4 Points	2 Points	
	2ELD2-RS7020B	750*2				1.0	√		√			√		√	4 Points*2	2 Points*2	
	2ELD2-CAN7020B					1.0		√			√	√		√	4 Points*2	2 Points*2	
	2ELD2-RS7030B	1200*2				1.0	√		√			√		√	4 Points*2	2 Points*2	
	2ELD2-CAN7030B					1.0		√			√	√		√	4 Points*2	2 Points*2	

Note: *STO function is in the process of certification

AC Servo Drive Series

Performance

Cost-effective AC Servo EL6

- Bandwidth of Velocity up to 2kHz
- Power range up to 1kW
- New design for connector, more convenient for wiring

EL6-D***Z	Pulse+dir
EL6-RS***Z	Pulse+dir /RS485
EL6-CAN***Z	CANopen

General Purpose AC Servo EL7/ELP

- Bandwidth of Velocity up to 3.2kHz
- Power range up to 7.5kW
- 220VAC/380VAC input
- RS485/EtherCAT/Profinet
- Safety torque off with SiL3(optional)
- Auto tuning

EL7-EC***	Pulse+dir/EtherCAT, 380VAC
EL7-PN***	Profinet, 380VAC
2EL7-EC***	EtherCAT,dual-axes, 220VAC
ELP-D***	Pulse+dir, 220VAC
ELP-RS***	Pulse+dir/RS485/Analog input
ELP-EC***	EtherCAT, 220VAC

High performance AC Servo EL8 (Coming soon)

- Bandwidth of Velocity up to 3.5kHz
- Power range up to 1kW with 220vac
- The frequency of pulse input up to 8Mpps
- Fault diagnosis and analysis
- Safety torque off (IEC61508 SIL3)
- RS485/EtherCAT/Profinet/EtherNet IP
- Auto tuning

EL8-SE***	Pulse+dir/Analog input
EL8-SF***	Pulse+dir/Analog input/Full close-loop/STO
EL8-ECF***	EtherCAT/Full close-loop/STO
EL8-PN***	Profinet/Full close-loop/STO
EL8-L***	For linear motor

Series

AC Servo Motor Series

Performance

Frame of 40/60/80mm Series

Enhanced Type ELM2S

- 23-bit optical multi-turn encoder
- Shorter cover
- IP67
- Direct Connect Plug

Standard Type ELM2

- 23-bit optical multi-turn encoder
- Shorter cover
- Ip65

Economic Type ELM1S

- 17-bit magnetic single-turn encoder
- Normal cover
- Ip65

Frame of 130/180mm Series

Frame of 130mm Type ELM

- 23-bit optical multi-turn encoder
- Ip65

Frame of 180mm Type ELM

- 23-bit optical multi-turn encoder
- Ip65

Series

AC Servo Drives

EL6 Series

- Power range: 100W - 1kW
- 220 VAC input
- Automatic motor identification
- Easy configuration
- Cost effective with stable performance

EL6 Series AC servo products are cost-effective AC digital servo which is designed for position high accurate control, power range up to 1kW, which can provide a perfect solution for different applications, performance with easy configuration process.

Combined with abundant features like MFC, vibration suppression, Multi - mode filter function etc, and with encoder resolution 17-bit or 23-bit, it can provide machines a intelligent performance.

EL6-D Version **EL6-D Series Drive**

Position/Internal velocity mode

- 5V differential pulse(500kHz) / 24V single-ended pulse(200kHz)
- Digital input and Digital output allows sink connection/source connection
- 17-bit magnetic single-turn encoder / 23-bit optical multi-turn encoder
- GUI Software - MotionStudio
  Online Inertia Ratio Identification
- Connector with Lock screw, more convenient connection

EL6-RS Version **EL6 - RS Series Drive**

Position/Velocity Mode

- Rs485 based on Modbus-RTU protocol
- Encoder signal output
- 5V differential pulse(500kHz) / 24V single-ended pulse(200kHz)
- Digital input and Digital output allows sink connection/source connection
- 17-bit magnetic single-turn encoder / 23-bit optical multi-turn encoder
- GUI Software - MotionStudio
  Online Inertia Ratio Identification
- Connector with Lock screw, more convenient connection

EL6-CAN Version **EL6-CAN Series Drive**

Profile Position/Profile Velocity/Profile Torque/Homing

- CANopen (CiA 301 & DS402)
- 4 RPDO & 4 TPDO
- Encoder signal output
- Digital input and Digital output allows sink connection/source connection
- 17-bit magnetic single-turn encoder / 23-bit optical multi-turn encoder
- GUI Software - Motion Studio
  Inertia load identification online
- Connector with Lock screw, more convenient connection

EL6 Servo System Performance

Lower torque-ripple, smooth speed

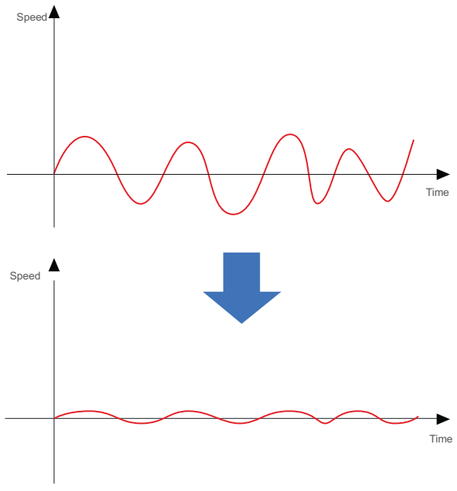

Obtain lower torque-ripple with new design of magnetic circuit, motor running smooth in low speed.

Efficient Configuration Methods

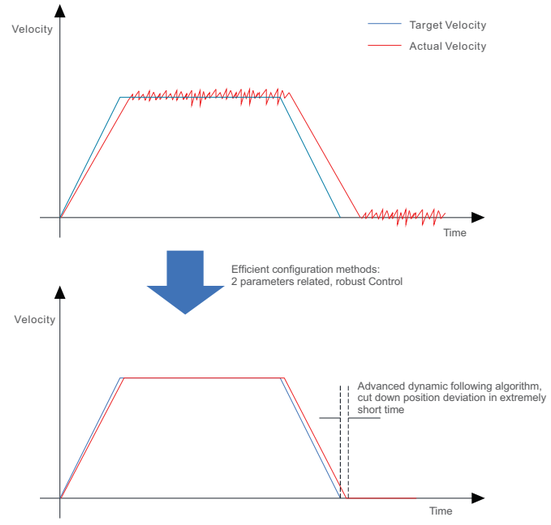

• Adaptive Notch Filter

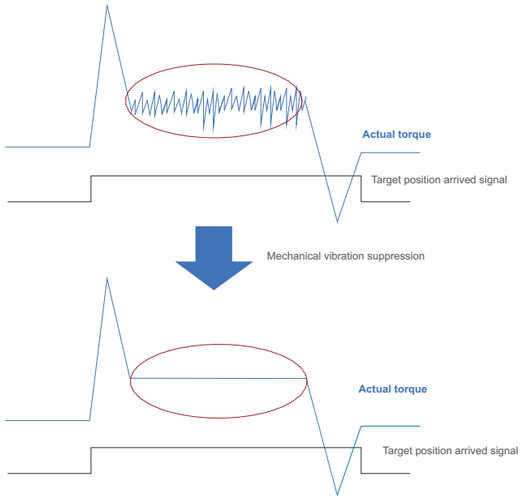

- 4 Adaptive Notch Filter
- Automatically / Manually Notch Filter Setting
- Notch Width Selectable
- Quick setting suppresses mechanical vibration, saving labor cost

• Anti-Vibration Filter

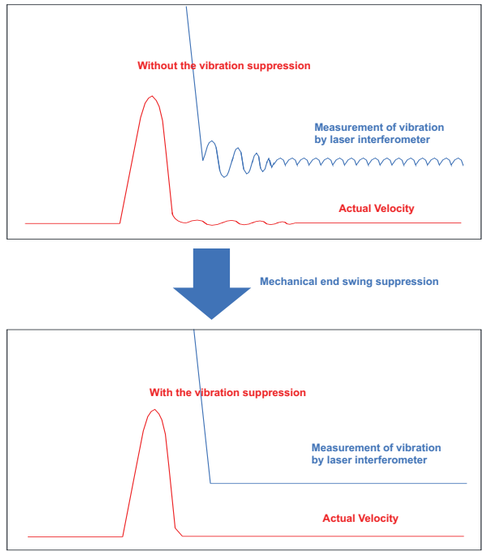

For mechanical equipment with lower stiffness, it is easy to produce low frequency vibration of less than 200Hz, which can be inhibited by mechanical end swing suppression, to realize the high-tempo operation of the equipment.

• P-N Junction

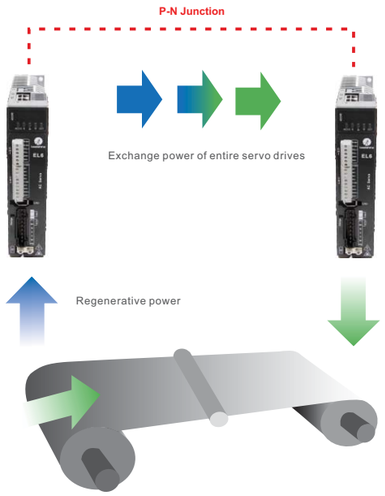

Directly connect the DC link circuit of entire servo drives to exchange power.
In a system having a powering (driving) shaft and regenerating (back tension) shaft such as the winder/unwinder unit, the power consumption of the entire system can be reduced.

• PR-Mode

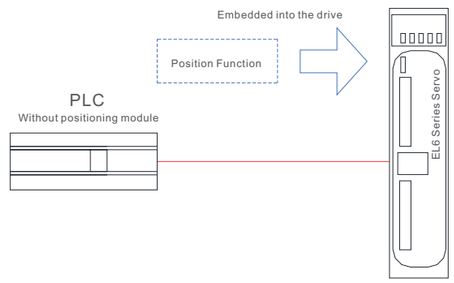

EL6-RS series embedded with 16 paths motion which setup internally, combined with position/velocity/homing/Jog/E-Stop/Limit switch.

• RS485 Communication Control / Digital Input Control

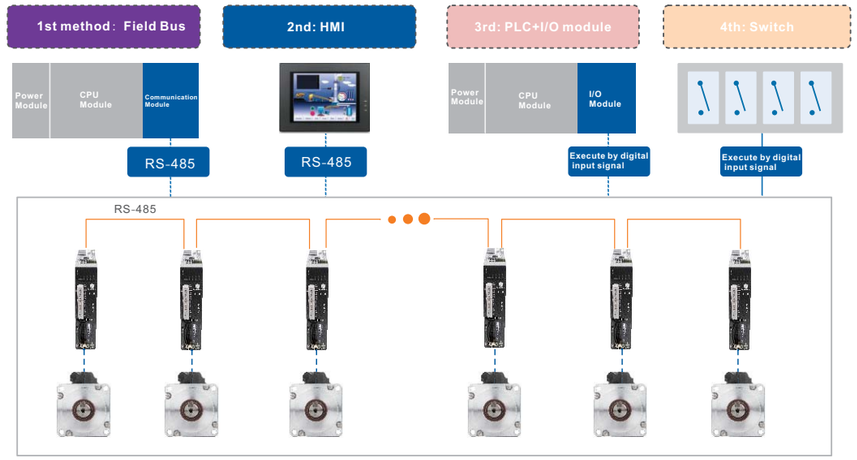

• CANopen

- RJ45 terminal for CANopen communication, LAN cable connection
- CiA 303-1 Cabling and connector pin assignment
- CiA 301 Application Layer and Communication Profile
- CiA 402 Device Profile Drives and Motion Control
- SDO, PDO, SYNC, EMCY, NMT, Heatbeat

Part Numbers

EL6 – D 1000 Z

Series Num	
EL6	Servo drive series

Command Source	
D	Pulse+direction Version
RS	RS485 Version (Pulse+direction /Modbus-RTU)
CAN	CANopen Version

Rated Output Power	
100	100W
400	400W
750	750W
1000	1000W

Version	
Z	Standard Version

Specifications

Drive model	EL6-D400Z EL6-RS400Z EL6-CAN400Z	EL6-D750Z EL6-RS750Z EL6-CAN750Z	EL6-D1000Z EL6-RS1000Z EL6-CAN1000Z
Rated output power	400W	750W	1000W
Rated output current [A]	3	5.2	7
Max output current [A]	13	18.4	26.5
Dimensions(mm)	175*168*40	175*168*50	175*168*50
Main power/Control power	Single phase 220V -15%~+10% 50/60Hz		
Control mode	IGBT SVPWM sinusoidal wave control		
Feedback mode	Bus encoder: RS485 protocol		
Input pulse	0-500kHZ,5V differential input ; 0-200kHZ,24V single-ended input		
Position bandwidth	200Hz		
Electronic gear ratio	1～8388608/1～8388608		
Velocity bandwidth	500Hz		
Input signal	DI: 4 programmable digital inputs, allows sink connection/source connection Servo enable, over-travel inhibition, gain switching, command pulse inhibition, speed zero clamp, deviation counter clear, alarm clear		
Output signal	DO: 3 programmable digital outputs(2 single-ended，1 differential) Alarm output, servo-ready, at-speed, zero-detection, velocity coincidence		
Encoder signal output	A phase, B phase, Z phase, long-distance drive mode output		
Alarm function	Over-voltage, under-voltage, over-current, over-load, encoder error, position deviation error, brake alarm, limit alarm, over-speed error etc.		
Operation and display	Jog, trapezoidal wave test, each parameter and input output signal can be modified and saved, five-bit LED to display rotational speed, current, position deviation, drive type version and address ID value etc.		
GUI Software	Can adjust the parameters of current loop, velocity loop, position loop, and change the value of input and output signals and the parameter of motor and save the values to the files which can be downloaded and uploaded, monitor the waveform of velocity and position in the ladder.		
Communication interface	RS232: Based on Modbus protocol RS485: Based on Modbus protocol		
Brake mode	Built-in brake 50Ω/50W		
Adapt load inertia	Less than 20 times motor inertia		
Weight	About 1.5-3Kg		
Environment	Environment: Avoid dust, oil fog and corrosive gases		
	Ambient Temp: 0 to +40℃		
	Humidity: 40% RH to 90%RH, no condensation		
	Vibration: 5.9 m/s^2 MAX		
	Storage Temperature: -20~80℃		
	Installation: Vertical installation		

Servo drive series	EL6-D***Z	EL6-RS***Z	EL6-CAN***Z
Control mode	• Position control • Internal Velocity control • JOG	• Position control • Velocity control • Torque control • JOG	• PP(Profile Position) • PV(Profile Velocity) • PT(Profile Torque) • HM(Homing)
Encoder output	X	√	√
Digital input	4 programmable digital inputs (allow sink connection/source connection)		
Digital output	3 programmable digital outputs(2 single-ended, 1 differential)		
Network	--	Modbus RTU (LAN CABLE-RJ45 terminal)	CANopen (LAN CABLE-RJ45 terminal)
Maximum frequency Of pulse input	5V differential , 0~500kHz 24V single-ended, 0~200kHz	5V differential , 0~500kHz 24V single-ended, 0~200kHz	--

Motion Studio - GUI Software

- Information such as parameter setting and monitoring are consolidated easily just by connecting a personal computer to servo drive.
- Display parameter setting in list or visual formats, and set parameters by selecting from the drop down list
- Adjust control gain finely on the [Tuning] window manually for better performance.
- State monitoring and 4 channel wave showing with high accuracy.
- Easy to set the values of object dictionary for drive with CANopen version.
- Easy to read/save/download/compare/reset all parameters.

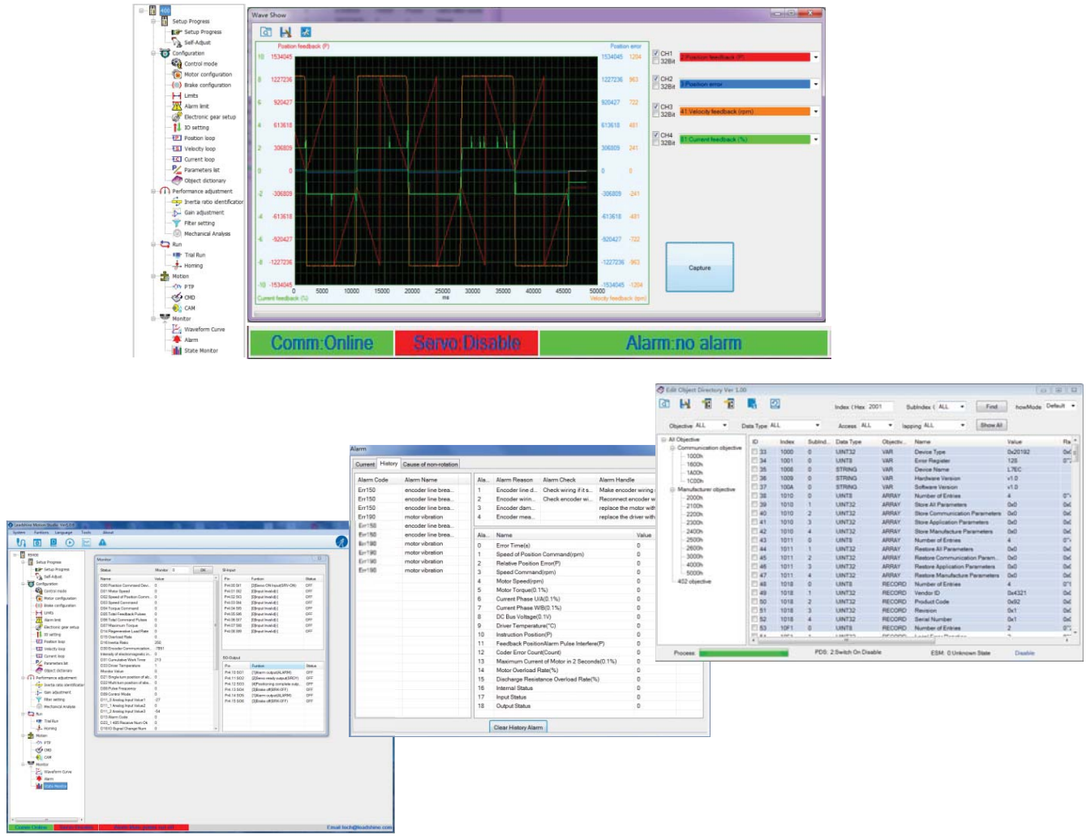

Servo Drive Pin Assignments

V EL6-D Model V EL6-RS Model V EL6-CAN Model

- **Encoder Signal Output(CN6)**
- **Communication Port(CN4,CN5)**
  - EL6-D series——RS232 for configuration
  - EL6-RS series——RS232 for configuration, RS485
  - EL6-CAN series——RS232 for configuration, CANopen
- **Pulse+Direction Signal Port(CN1)**
  - P+24: 24V pulse+
  - D+24: 24V direction+
  - PUL＋: 5V pulse+
  - PUL-: pulse-
  - DIR+: 5V direction+
  - DIR-: pulse-
- **Control Signal Port(CN2)**
  - COM+: Digital input common terminal
  - SI1: Digital input 1
  - SI2: Digital input 2
  - SI3: Digital input 3
  - SI4: Digital input 4
  - COM-: Digital output common terminal
  - SO1: Digital output 1
  - SO2: Digital output 2
  - SO3+: Digital output 3+
  - SO3-: Digital output 3-
- **Encoder Input Port(CN2)**
  - Motor Encoder Feedback Input
- **Power LED**
- **Heat Sink**
  - Mounting Base and Heat-dissipation Base
- **LED Display**
- **Power Port(L1, L2)**
  - For 200W~1000W: single phase 220V, -15~+15%, 50/60Hz
- **External Regenerative Resistor Terminal (P+, Br)**
  - P+: External regenerative resistor P terminal
  - Br: External regenerative resistor terminal
- **Motor Power Input(UVW, PE)**
  - UVW: Motor power input
  - PE: Frame ground
- **Ground Protection Terminal**

- **LED Display**
  - Five LED lights to display monitor value, parameter value and set value
- **Key of Mode Switch**
  Press this key to switch among 4 mode:
  1. Data monitor mode
  2. Parameter setting mode
  3. Auxiliary function mode
  4. EEPROM written mode
- **Confirming Button**
  - Entrance for submenu, confirming input
- **Down Key**
  - Press this key to decrease the set value of current flash bit
- **Up Key**
  - Press this key to increase the set value of current flash bit
- **Left Key**
  - Press this key to shift to the next digit on the left

External Regeneration Resistor

Type	Power	Resistance
RXLG-50W	50W	100Ω
RXLG-100W	100W	100Ω
RXLG-200W	200W	50Ω
RXLG-400W	400W	50Ω
RXLG-800W	800W	50Ω

Mechanical Dimensions

Unit: mm

- **400W**

V EL6-D Model V EL6-RS Model V EL6-CAN Model

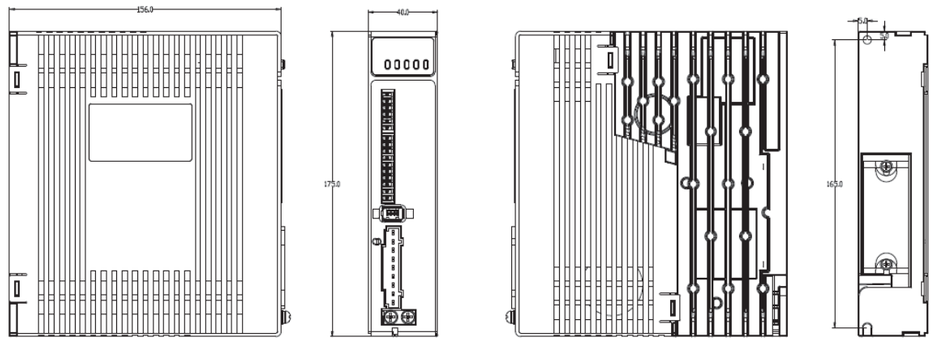

- **750W**

V EL6-D Model V EL6-RS Model V EL6-CAN Model

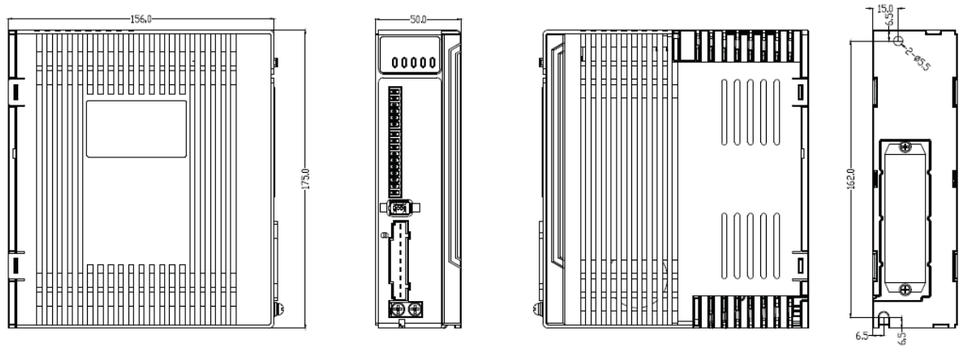

- **1000W**

V EL6-D Model V EL6-RS Model V EL6-CAN Model

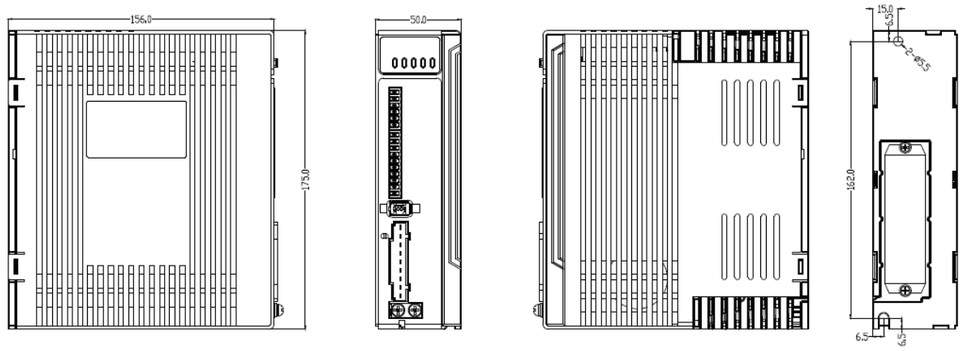

System Wiring

• Position/Torque/Velocity Control

☑ EL6-D Model ☑ EL6-RS Model ☐ EL6-CAN Model

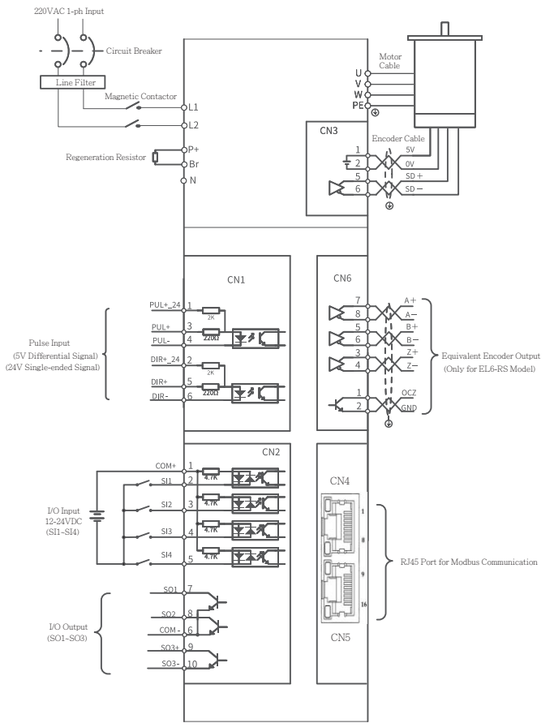

• CANopen Control

☐ EL6-D Model ☐ EL6-RS Model ☑ EL6-CAN Model

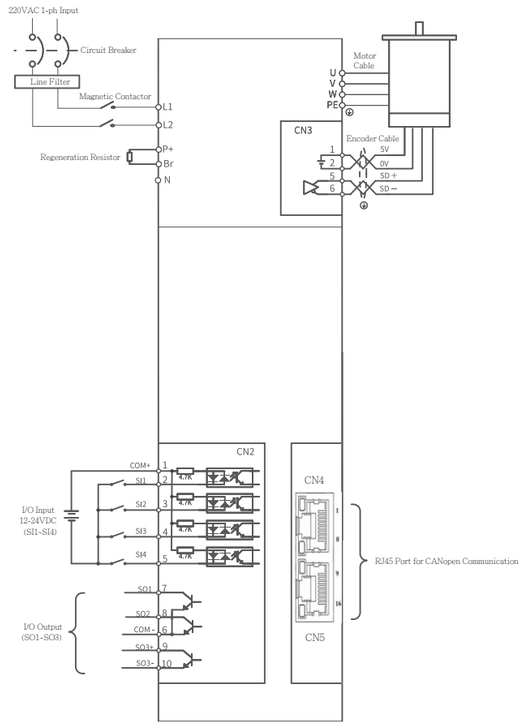

AC Servo Drives

ELP Series

- Power range: 100W - 2kW
- 220 VAC input
- Automatic motor identification
- Easy tuning
- Built-in dynamic brake

ELP Series AC servo drives are high performance AC digital servo drives which is designed for position / velocity / torque high accurate control, power range up to 2kW and it can provide intelligent performance with easy tuning process.

Combined with abundant features like MFC, vibration suppression, Multi-mode filter function, etc. It provides machines a compact size, low tuning works, but high resolution encoder up to 23-bit, which can be used for high accuracy applications.

ELP-D Version **ELP-D Series Drive**

Position Mode

- 5V differential pulse/24V single-ended pulse
- 17-bit magnetic single-turn encoder / 23-bit optical multi-turn encoder
- Built-in dynamic brake
- GUI Software - Motion Studio

ELP-RS Version **ELP - RS Series Drive**

Position/Velocity/Torque Mode

- Rs485 based on Modbus
- 16paths Motion-PR Mode
- 17-bit magnetic single-turn encoder / 23-bit optical multi-turn encoder
- Built-in dynamic brake
- GUI Software - Motion Studio

ELP-EC Version **ELP-EC Series Drive**

Position/Velocity/Torque Mode

- EtherCAT—CiA402, CoE
- 14 Inputs and 6 outputs
- 17-bit magnetic single-turn encoder / 23-bit optical multi-turn encoder
- Built-in dynamic brake
- GUI Software - Motion Studio

High Precision

- Up to 23-bit(8388608 ppr) high resolution encoder.
- Motors come with up to 23-bit (8388608 ppr) high resolution encoders are also aviliable for applications require higher precision, smoother movement and lower torque ripple

Lower torque ripple, lower virbration

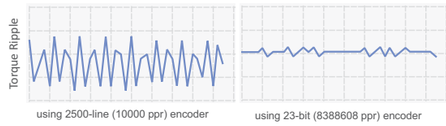

Excellent Position Following Capability

- By adopting load identification and torque feedforward advanced control algorithms, very small velocity ripple and position following error can be achieved. It is a great feature of the ELP when multi-axis synchronization such as interpolations are required.

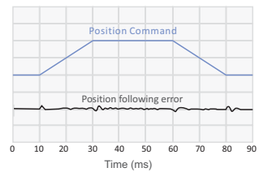

Vibration Suppression

- Adaptive filter makes the notch filter frequency automatically follow the machine resonance frequency.
- Can suppress vibration occurring at both starting and stopping in low stiffness machine.
- Suppress vibration frequency up to 1500 Hz.

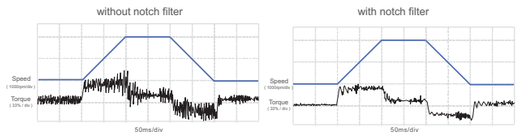

Command Signal Smoothing

- Command signal smoothing can soften the effect of immediate change in velocity and direction, delivering smoother movement and longer lifetime.

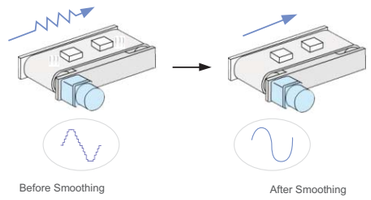

Part Numbers

ELP - RS 2000 Z

Series Num	
ELP	ELP Series

Command Source	
D	Pulse+Direction Version
RS	RS 485 Version (Pulse+direction/Analog/Modbus)
EC	EtherCAT Version

Version	
Z	Standard Version
S	Enhanced Version

Rated Output Power	
400	400W
750	750W
1000	1000W
1500	1500W
2000	2000W

Specifications

Servo drive model	ELP-*400Z	ELP-*750Z	ELP-*1000Z	ELP-*1500Z	ELP-*2000Z
Rated output power	400W	750W	1000W	1500W	2000W
Rated output current [A]	3	5.5	7	9.5	12
Max output current [A]	9	16.5	21	28.5	36
Dimensions(mm)	40*175*156	50*175*156	50*175*156	80*175*175	80*175*175
Main power	1-phase 190VAC – 240VAC , 50/60Hz			1 or 3-phase 190VAC – 240VAC,50/60Hz	
Control power	1-phase 190VAC–240VAC, 50/60Hz				
Control mode	IGBT SVPWM sinusoidal wave control				
Feedback mode	17-bit magnetic single-turn encoder / 23-bit optical multi-turn encoder				
Input pulse	0-500kHZ,5V differential input				
Position bandwidth	200Hz				
Electronic gear ratio	1~8388608/1~8388608				
Analog input	not available				
Velocity bandwidth	500Hz				
Input signal	DI: 9 programmable digital inputs, allows sink connection Servo enable, over-travel inhibition, gain switching, command pulse inhibition, speed zero clamp, deviation counter clear, alarm clear				
Output signal	DO: 6 programmable digital outputs Alarm output, servo-ready, at-speed, zero-detection, velocity coincidence				
Encoder signal output	A phase, B phase, Z phase, long-distance drive mode output				
Alarm function	Over-voltage, under-voltage, over-current, over-load, encoder error, position deviation error, brake alarm, limit alarm, over-speed error etc.				
GUI Software	All setting values of current loop, velocity loop , position loop can be modified and saved with Motion Studio software , all setting values can be downloaded and uploaded				
Communication interface	USB：Based on Modbus protocol (according to USB2.0 specification) RS485				
Brake mode	Built-in brake resistor or external resistor				
Adapt load inertia	Less than 30 times motor inertia				
Weight	About 1.5-3Kg				

Servo drive series	ELP-D***Z	ELP- RS***Z	ELP-EC***Z
Control mode	• Position control • JOG	• Position control • Velocity control • Torque control • Built-in PR mode Modbus RTU • JOG	• CSP(Cyclic Synchronous Position) • CSV(Cyclic Synchronous Velocity) • CST(Cyclic Synchronous Torque) • PP(Profile Position) • PV(Profile Velocity) • PT(Profile Torque) • HM(Homing)
Encoder output	5V Differential , 0-500kHz 24Vsingle-ended,0-200kHz	5V Differential , 0-500kHz 24Vsingle-ended,0-200kHz	--
Digital input	9 programmable digital inputs (allows sink connection/ source connection)	9 programmable digital inputs (allows sink connection/ source connection)	14 programmable digital inputs (allows sink connection/source connection) 2 differential (for capture probe)
Digital output	6 programmable digital outputs (4 single-ended , 2 differential)		
Analog input		2 analog input: -10 ~ +10Vdc	
Network	--	Modbus RTU (RJ 45)	EtherCAT (RJ45)
Maximum frequency Of pulse input	5V Differential , 500kHz 24Vsingle-ended, 200kHz	5V Differential , 500kHz 24Vsingle-ended, 200kHz	--

Motion Studio - GUI Software

- Information such as parameter setting and monitoring are consolidated easily just by connecting a personal computer to servo drive.
- Display parameter setting in list or visual formats, and set parameters by selecting from the drop down list
- Adjust control gain finely on the [Tuning] window manually for better performance.
- State monitoring and 4 channel wave showing with high accuracy.
- Easy to set the values of object dictionary for drive with EtherCAT version.
- Easy to read/save/download/compare/reset all parameters.

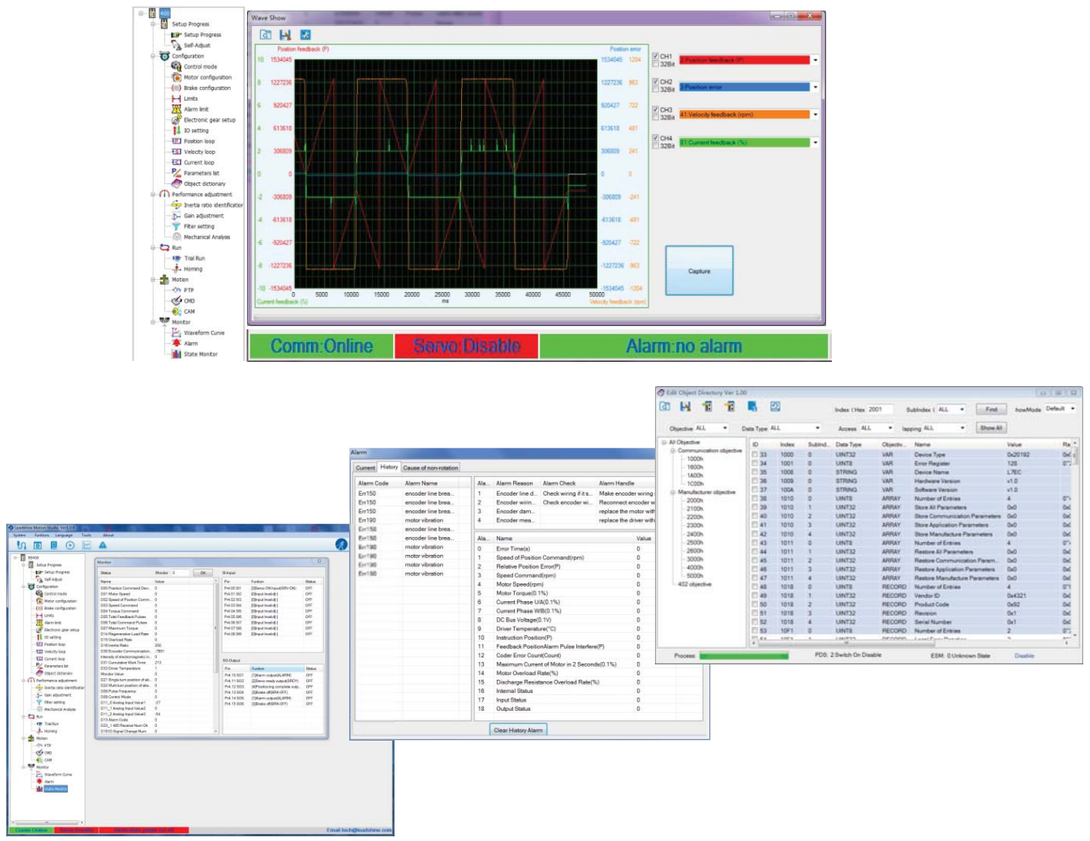

Servo Drive Pin Assignments

☑ ELP-D Model ☑ ELP-RS Model ☐ ELP-EC Model

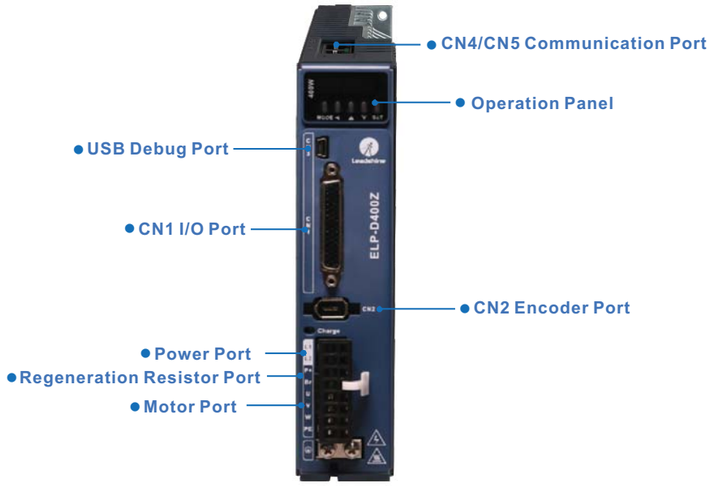

☐ ELP-D Model ☐ ELP-RS Model ☑ ELP-EC Model

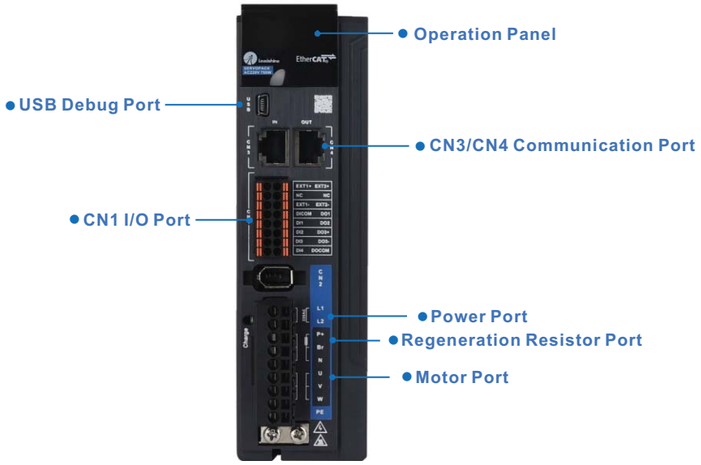

External Regeneration Resistor

Type	Power	Resistance
RXLG-50W	50W	100Ω
RXLG-100W	100W	100Ω
RXLG-200W	200W	50Ω
RXLG-400W	400W	50Ω
RXLG-800W	800W	50Ω

Mechanical Dimensions

Unit: mm

- **200W/400W**

☑ ELP-D Model ☑ ELP-RS Model ☑ ELP-EC Model

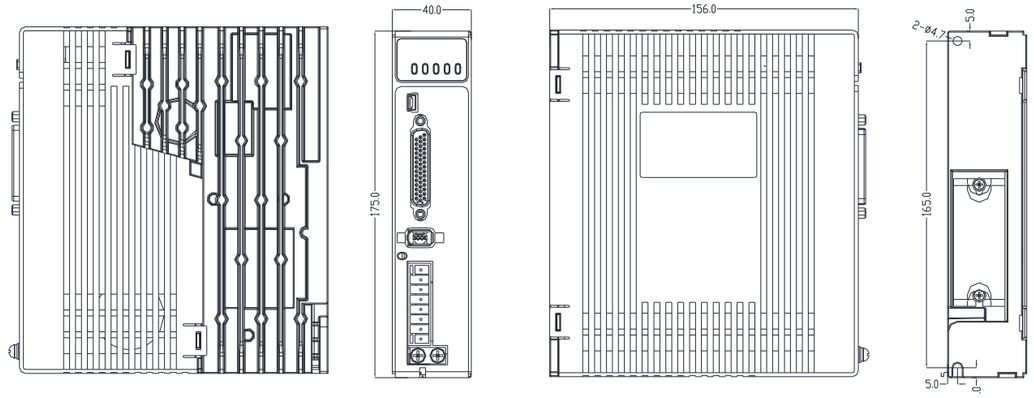

- **750W/1000W**

☑ ELP-D Model ☑ ELP-RS Model ☑ ELP-EC Model

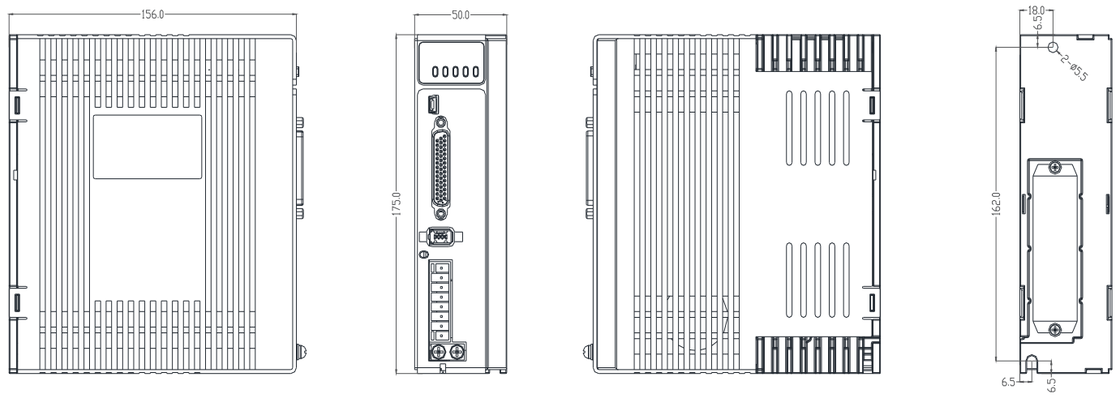

- **1500W/2000W**

☑ ELP-RS Model ☑ ELP-EC Model

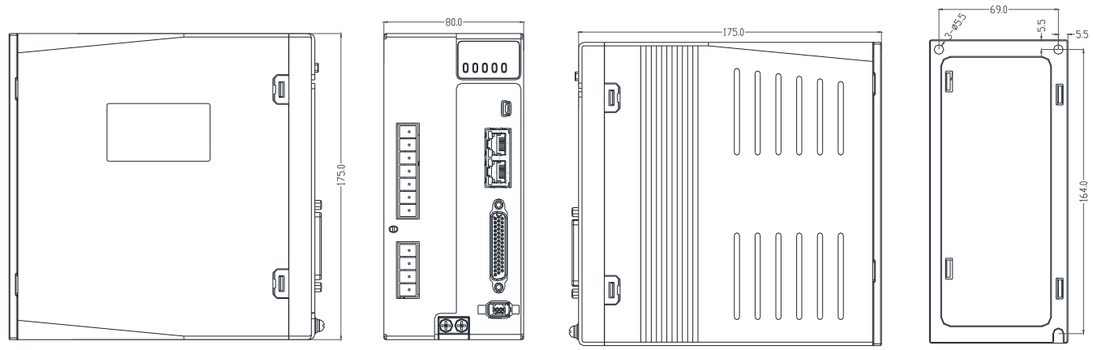

System Wiring

• Position Control

☑ ELP-D Model ☑ ELP-RS Model ☐ ELP-EC Model

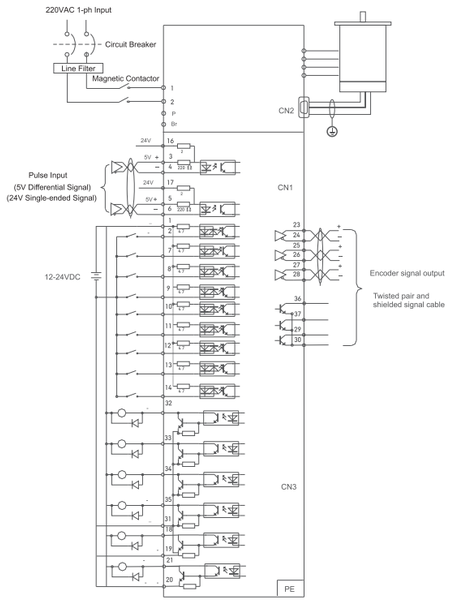

• Torque/Velocity Control

☐ ELP-D Model ☑ ELP-RS Model ☐ ELP-EC Model

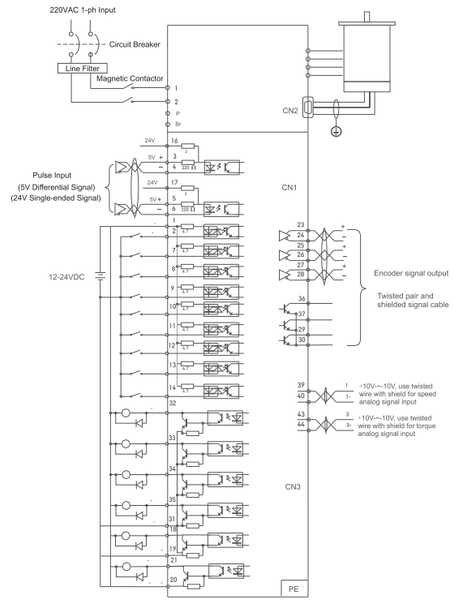

• EtherCAT Control

☐ ELP-D Model ☐ ELP-RS Model ☑ ELP-EC Model

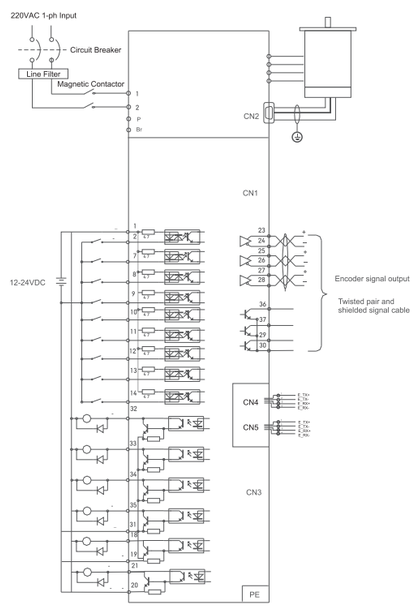

AC Servo Drives

EL7 Series

NEW

- Power range: 750W - 7.5kW
- 380 VAC input
- Automatic motor identification
- Easy tuning
- Built-in dynamic brake

EL7 Series AC servo products are high performance AC digital servo which is designed for position / velocity / torque high accurate control, power range up to 7.5kW and it can provide intelligent performance with easy tuning process.

Combined with abundant features like MFC, vibration suppression, Multi-mode filter function, etc. It provides machines a compact size, low tuning works, but high resolution encoder up to 23-bit, which can be used for high accuracy applications.

EtherCAT

EL7 Version	EL7 Series Drive

Position/Velocity/Torque Mode

- EtherCAT—CiA402, CoE
- Bandwidth of speed loop up to 3.2kHz
- 17-bit magnetic single-turn encoder/ 23-bit optical multi-turn encoder
- Built-in dynamic brake
- GUI Software - Motion Studio

High Precision

- Up to 23-bit(8388608 ppr) high resolution encoder.
- Motors come with up to 23-bit (8388608 ppr) high resolution encoders are also aviliable for applications require higher precision, smoother movement and lower torque ripple

Lower torque ripple, lower virbration

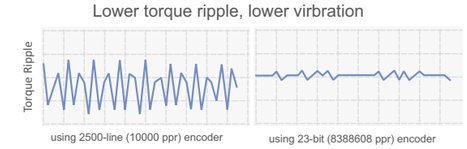

Excellent Position Following Capability

- By adopting load identification and torque feedforward advanced control algorithms, very small velocity ripple and position following error can be achieved. It is a great feature of the ELP when multi-axis synchronization such as interpolations are required.

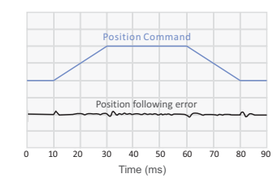

Vibration Suppression

- Adaptive filter makes the notch filter frequency automatically follow the machine resonance frequency.
- Can suppress vibration occurring at both starting and stopping in low stiffness machine.
- Suppress vibration frequency up to 1500 Hz.

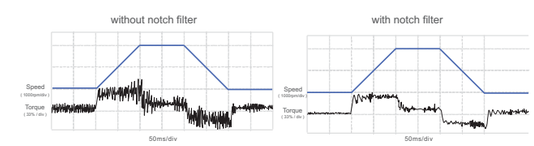

Command Signal Smoothing

- Command signal smoothing can soften the effect of immediate change in velocity and direction, delivering smoother movement and longer lifetime.

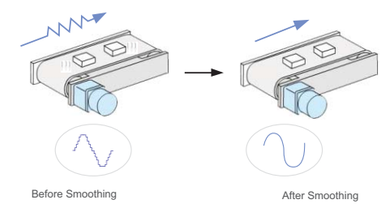

Part Numbers

EL7 - EC 2000 T3

Series Num	
EL7	EL7 Series

Command Source	
EC	EtherCAT Version

Drive Voltage	
T3	380VAC Input

Rated Output Power	
750	750W
1000	1000W
1500	1500W
2000	2000W
3000	3000W
4400	4400W
5500	5500W
7500	7500W

Specifications

Servo drive model	EL7-EC750T3	EL7-EC1000T3	EL7-EC1500T3	EL7-EC2000T3	EL7-EC3000T3	EL7-EC4400T3	EL7-EC5500T3	EL7-EC7500T3
Rated output power	750W	1000W	1500W	2000W	3000W	4400W	5500W	7500W
Rated output current [A]	2.5	3.5	5.4	8.4	11.9	16.5	20.8	25.7
Max output current [A]	7.5	10.5	16.2	21	29.7	41.2	52	64.2
Dimensions (mm)	55*175*179	55*175*179	55*175*179	80*175*179	80*175*179	90*250*230	90*250*230	90*250*230
Main power	3-phase 380VAC -15%~+10%, 50/60Hz							
Control power	3-phase 380VAC -15%~+10%, 50/60Hz							
Control mode	IGBT SVPWM sinusoidal wave control							
Feedback mode	17-bit magnetic single-turn encoder/ 23-bit optical multi-turn encoder							
Input pulse	0-500kHZ,5V differential input							
Position bandwidth	200Hz							
Electronic gear ratio	1~8388608/1~8388608							
Analog input	Not available							
Velocity bandwidth	500Hz							
Input signal	DI: 4 programmable digital inputs, allows sink connection Servo enable, over-travel inhibition, gain switching, command pulse inhibition, speed zero clamp, deviation counter clear, alarm clear							
Output signal	DO: 3 programmable digital outputs Alarm output, servo-ready, at-speed, zero-detection, velocity coincidence							
Encoder signal output	A phase, B phase, Z phase, long-distance drive mode output							
Alarm function	Over-voltage, under-voltage, over-current, over-load, encoder error, position deviation error, brake alarm, limit alarm, over-speed error etc.							
GUI Software	All setting values of current loop, velocity loop , position loop can be modified and saved with Motion Studio software , all setting values can be downloaded and uploaded							
Communication interface	USB：Based on Modbus protocol (according to USB2.0 specification) RS485							
Brake mode	Built-in brake resistor or external resistor							
Adapt load inertia	Less than 30 times motor inertia							
Weight	About 1.5-3Kg							

Servo drive series	EL7-EC***T3
Control mode	• CSP(Cyclic Synchronous Position) • CSV(Cyclic Synchronous Velocity) • CST(Cyclic Synchronous Torque) • PP(Profile Position) • PV(Profile Velocity) • PT(Profile Torque) • HM(Homing) • Pulse
Encoder output	RS485 bus communication
Digital input	4 programmable digital inputs (allows sink connection/ source connection)
Digital output	3 programmable digital outputs (2 single-ended , 1 differential)
Network	EtherCAT (RJ45)
Maximum frequency Of pulse input	5V Differential , 500kHz 24Vsingle-ended, 200kHz

Motion Studio - GUI Software

- Information such as parameter setting and monitoring are consolidated easily just by connecting a personal computer to servo drive.
- Display parameter setting in list or visual formats, and set parameters by selecting from the drop down list
- Adjust control gain finely on the [Tuning] window manually for better performance.
- State monitoring and 4 channel wave showing with high accuracy.
- Easy to set the values of object dictionary for drive with EtherCAT version.
- Easy to read/save/download/compare/reset all parameters.

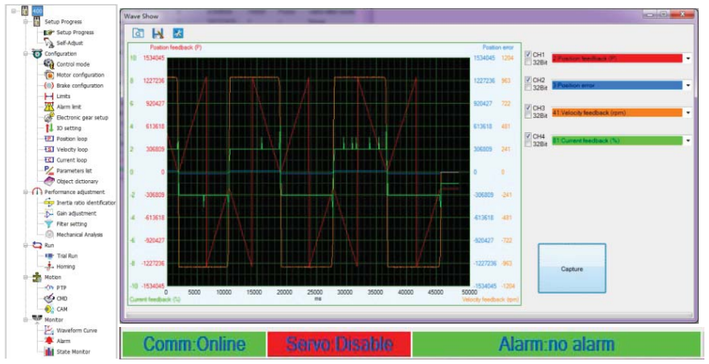

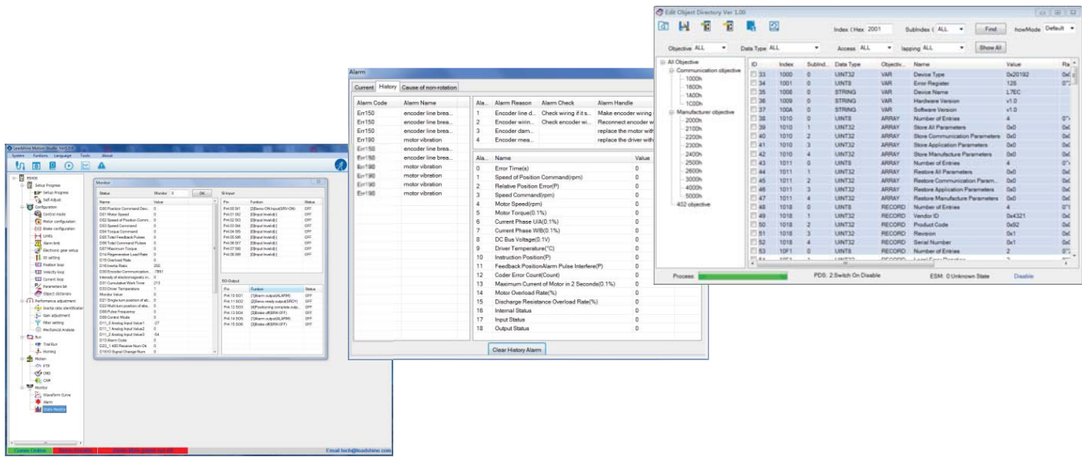

Servo Drive Pin Assignments

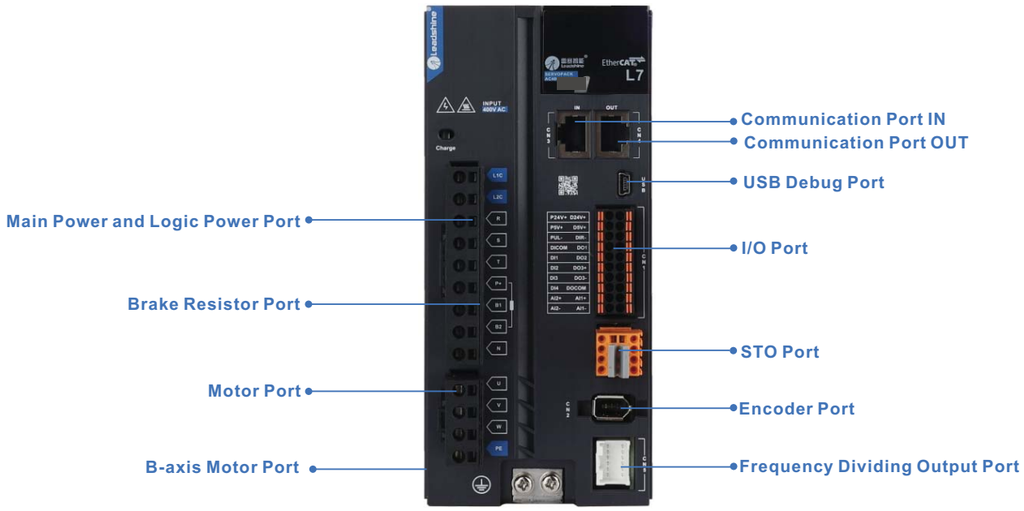

External Regeneration Resistor

Type	Power	Resistance
RXLG-50W	50W	100Ω
RXLG-100W	100W	100Ω
RXLG-200W	200W	50Ω
RXLG-400W	400W	50Ω
RXLG-800W	800W	50Ω

Mechanical Dimensions

Unit: mm

- **750W/1000W/1.5kW**

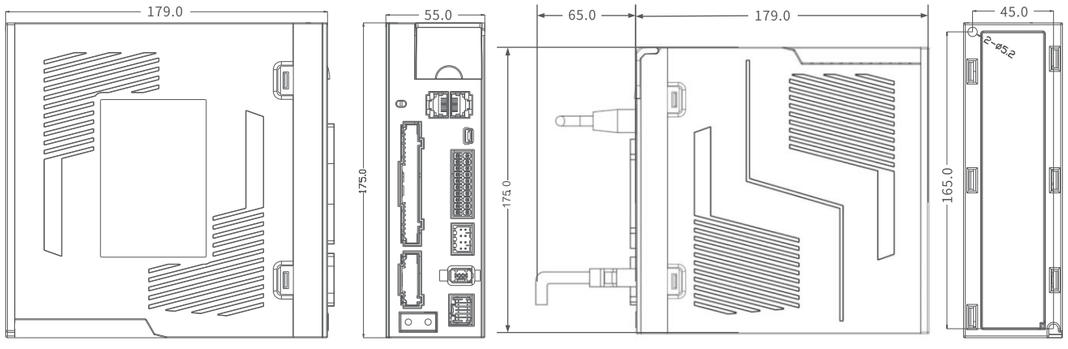

- **2kW/3kW**

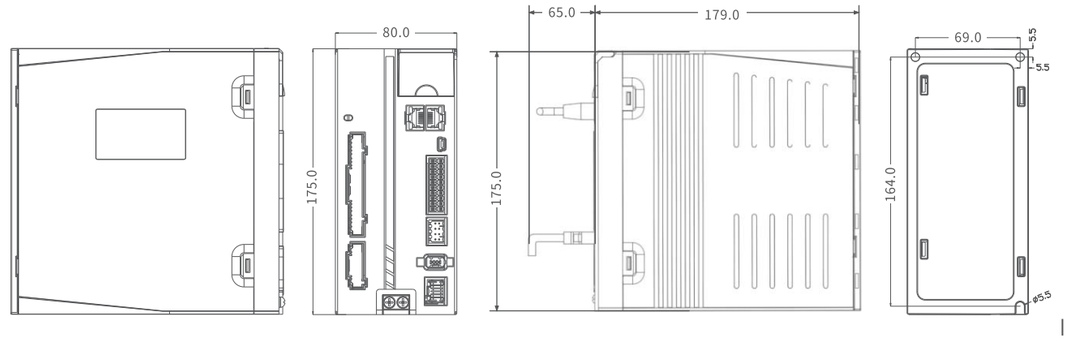

- **4.4kW/5.5kW/7.5kW**

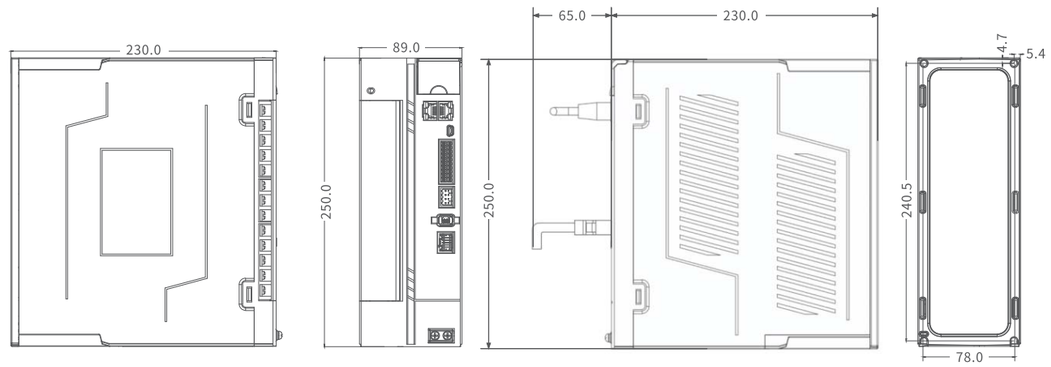

System Wiring

- **750W-7.5kW**

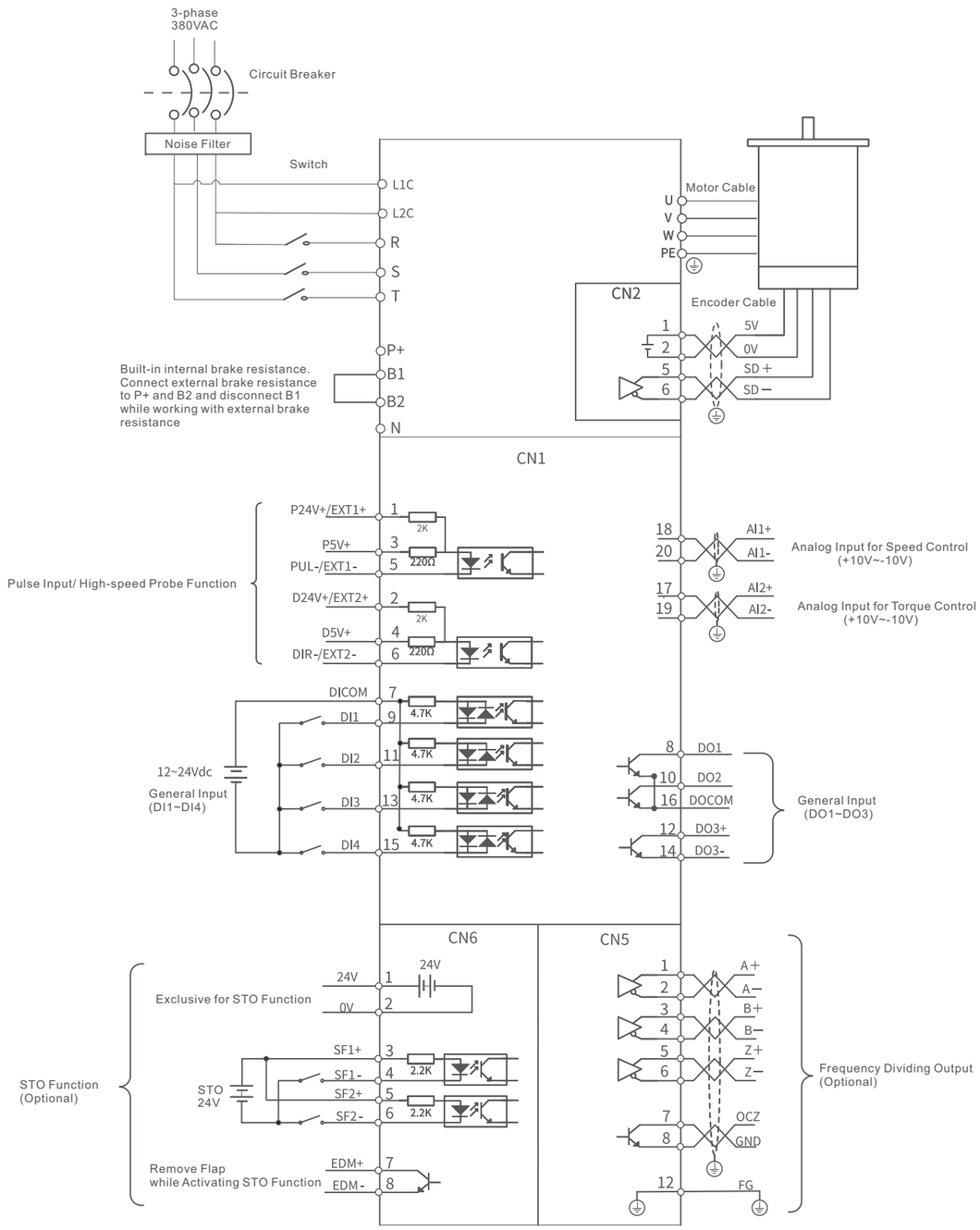

AC Servo Drives

EL7-PN Series (Coming soon)

- Profinet communication
  PTCP (IEC61158)
  100Mbit/s (100BASE-TX)
  Conform to PROFIdrive , AC1/AC3/AC4 supported
- 380VAC, 0.75 -7.5kW
- STO (SiL3 , optional)
- Command source : Profinet communication , Pulse+dir
- Velocity bandwidth up to 3.5kHZ
- Auto-tuning

Products Model

Model	Rated output power	Main power(VAC)	Rated output current [A]	Max output current [A]	Dimensions(mm)
EL7-PN750T3	750W	3-phase 380VAC -15%~+10%, 50/60Hz	2.5	7.5	55*175*179
EL7-PN1000T3	1000W	3-phase 380VAC -15%~+10%, 50/60Hz	3.5	10.5	55*175*179
EL7-PN1500T3	150W	3-phase 380VAC -15%~+10%, 50/60Hz	5.4	16.2	55*175*179
EL7-PN2000T3	2000W	3-phase 380VAC -15%~+10%, 50/60Hz	8.4	21	80*175*179
EL7-PN3000T3	3000W	3-phase 380VAC -15%~+10%, 50/60Hz	11.9	29.7	80*175*179
EL7-PN4400T3	4400W	3-phase 380VAC -15%~+10%, 50/60Hz	16.5	41.2	90*250*230
EL7-PN5500T3	5500W	3-phase 380VAC -15%~+10%, 50/60Hz	20.8	52	90*250*230
EL7-PN7500T3	7500W	3-phase 380VAC -15%~+10%, 50/60Hz	25.7	64.2	90*250*230

Application

Electronics

Logistics

Lithium battery

Printing Machines

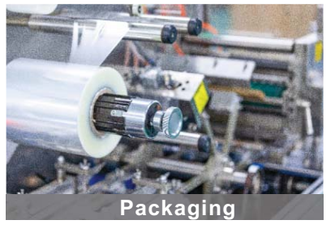
Packaging

AC Servo Drives

NEW

2EL7 Series

- Power range: 200W - 1kW
- 220 VAC input
- Automatic motor identification
- Easy tuning
- Built-in dynamic brake

2EL7 Series AC servo products are high performance AC digital servo which is designed for position / velocity / torque high accurate control, power range up to 1kW and it can provide intelligent performance with easy tuning process.

Combined with abundant features like MFC, vibration suppression, Multi-mode filter function, etc. It provides machines a compact size, low tuning works, but high resolution encoder up to 23-bit, which can be used for high accuracy applications.

EtherCAT

2EL7 Version | 2EL7 Series Drive

Position/Velocity/Torque Mode

- EtherCAT—CiA402, CoE
- 8 Inputs and 3 outputs
- 17-bit magnetic single-turn encoder / 23-bit optical multi-turn encoder
- Built-in dynamic brake and electronic cam
- GUI Software - Motion Studio
- Save wiring and save installation space up to 43% at most

High Precision

- Up to 23-bit(8388608 ppr) high resolution encoder.
- Motors come with up to 23-bit (8388608 ppr) high resolution encoders are also aviliable for applications require higher precision, smoother movement and lower torque ripple

Lower torque ripple, lower virbration

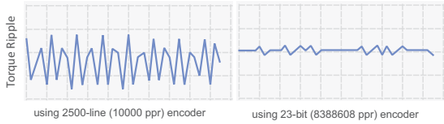

Excellent Position Following Capability

- By adopting load identification and torque feedforward advanced control algorithms, very small velocity ripple and position following error can be achieved. It is a great feature of the ELP when multi-axis synchronization such as interpolations are required.

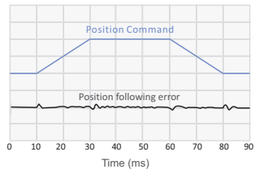

Vibration Suppression

- Adaptive filter makes the notch filter frequency automatically follow the machine resonance frequency.
- Can suppress vibration occurring at both starting and stopping in low stiffness machine.
- Suppress vibration frequency up to 1500 Hz.

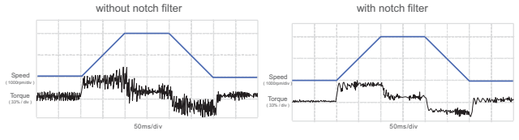

Command Signal Smoothing

- Command signal smoothing can soften the effect of immediate change in velocity and direction, delivering smoother movement and longer lifetime.

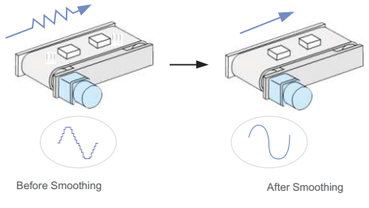

Part Numbers

2 EL7 EC - 400 S

Number of Axis

2	Double-axis

Series Num

EL7	EL7 series

Command Source

EC	EtherCAT

Rated Power

200	200W+200W
400	400W+400W
750	800W+800W
1000	1000W+1000W

Version

S	Enhanced Version

Specifications

Servo drive model	2EL7-EC200S	2EL7-EC400S	2EL7-EC750S	2EL7-EC1000S
Rated output power	200W	400W	750W	1000W
Rated output current [A]	1.9	3.2	5.1	5.7
Max output current [A]	5.7	9.6	15.3	17.1
Dimensions(mm)	55*175*186	55*175*186	80*175*186	80*175*186
Main power	1-phase/3-phase 190VAC – 240VAC , 50/60Hz			
Control power	1-phase/3-phase 190VAC–240VAC, 50/60Hz			
Control mode	IGBT SVPWM sinusoidal wave control			
Feedback mode	17-bit magnetic single-turn encoder / 23-bit optical multi-turn encoder			
Input pulse	0-500kHZ,5V differential input			
Position bandwidth	200Hz			
Electronic gear ratio	1~8388608/1~8388608			
Analog input	not available			
Velocity bandwidth	500Hz			
Input signal	DI: 8 programmable digital inputs, allows sink connection Servo enable, over-travel inhibition, gain switching, command pulse inhibition, speed zero clamp, deviation counter clear, alarm clear			
Output signal	DO: 3 programmable digital outputs Alarm output, servo-ready, at-speed, zero-detection, velocity coincidence			
Encoder signal output	A phase, B phase, Z phase, long-distance drive mode output			
Alarm function	Over-voltage, under-voltage, over-current, over-load, encoder error, position deviation error, brake alarm, limit alarm, over-speed error etc.			
GUI Software	All setting values of current loop, velocity loop , position loop can be modified and saved with Motion Studio software , all setting values can be downloaded and uploaded			
Communication interface	USB：Based on Modbus protocol (according to USB2.0 specification) RS485			
Brake mode	Built-in brake resistor or external resistor			
Adapt load inertia	Less than 30 times motor inertia			
weight	About 1.5-3Kg			

Servo drive series	2EL7
Control mode	• CSP(Cyclic Synchronous Position) • CSV(Cyclic Synchronous Velocity) • CST(Cyclic Synchronous Torque) • PP(Profile Position) • PV(Profile Velocity) • PT(Profile Torque) • HM(Homing)
Digital input	8 inputs (two axis shared, allow sink or source connection)
Digital output	3 outputs (2 single-ended, 1 differential)
Network	EtherCAT (RJ45)

Motion Studio - GUI Software

- Information such as parameter setting and monitoring are consolidated easily just by connecting a personal computer to servo drive.
- Display parameter setting in list or visual formats, and set parameters by selecting from the drop down list
- Adjust control gain finely on the [Tuning] window manually for better performance.
- State monitoring and 4 channel wave showing with high accuracy.
- Easy to set the values of object dictionary for drive with EtherCAT version.
- Easy to read/save/download/compare/reset all parameters.

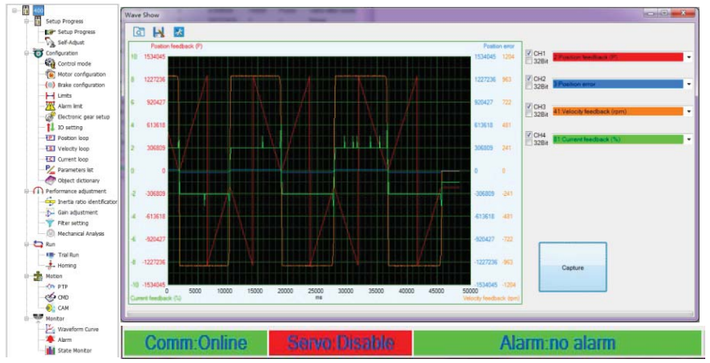

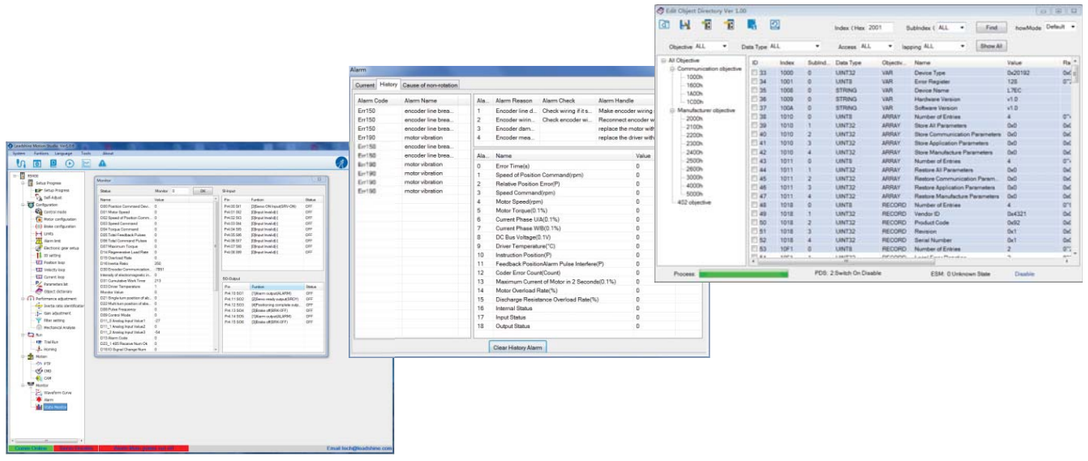

Servo Drive Pin Assignments

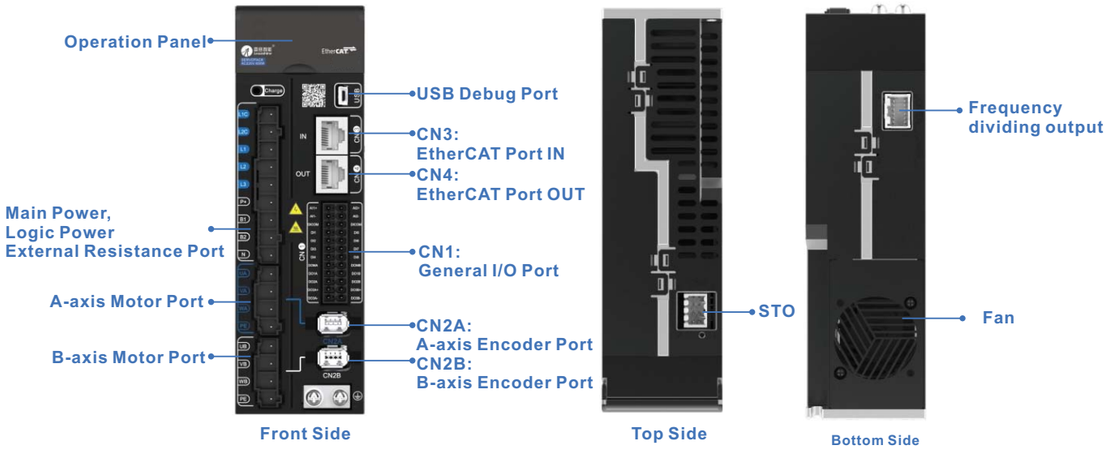

External Regeneration Resistor

Type	Power	Resistance
RXLG-50W	50W	100Ω
RXLG-100W	100W	100Ω
RXLG-200W	200W	50Ω
RXLG-400W	400W	50Ω
RXLG-800W	800W	50Ω

Mechanical Dimensions

Unit: mm

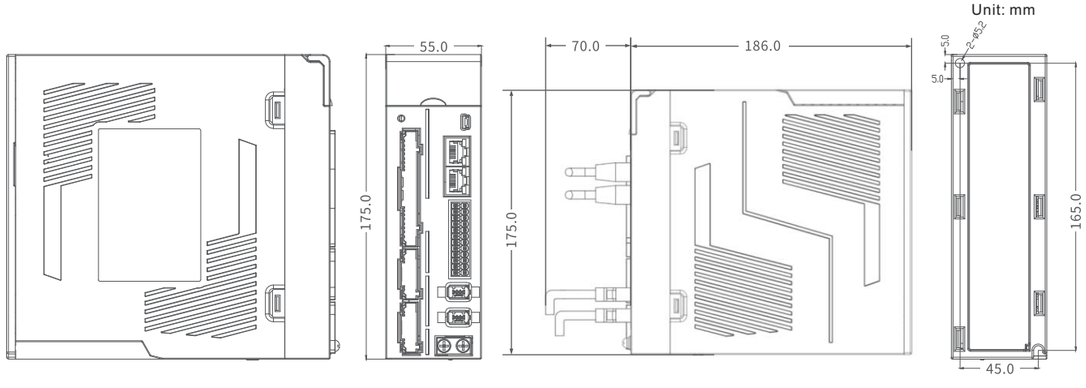

System Wiring

- **200W-1kW**

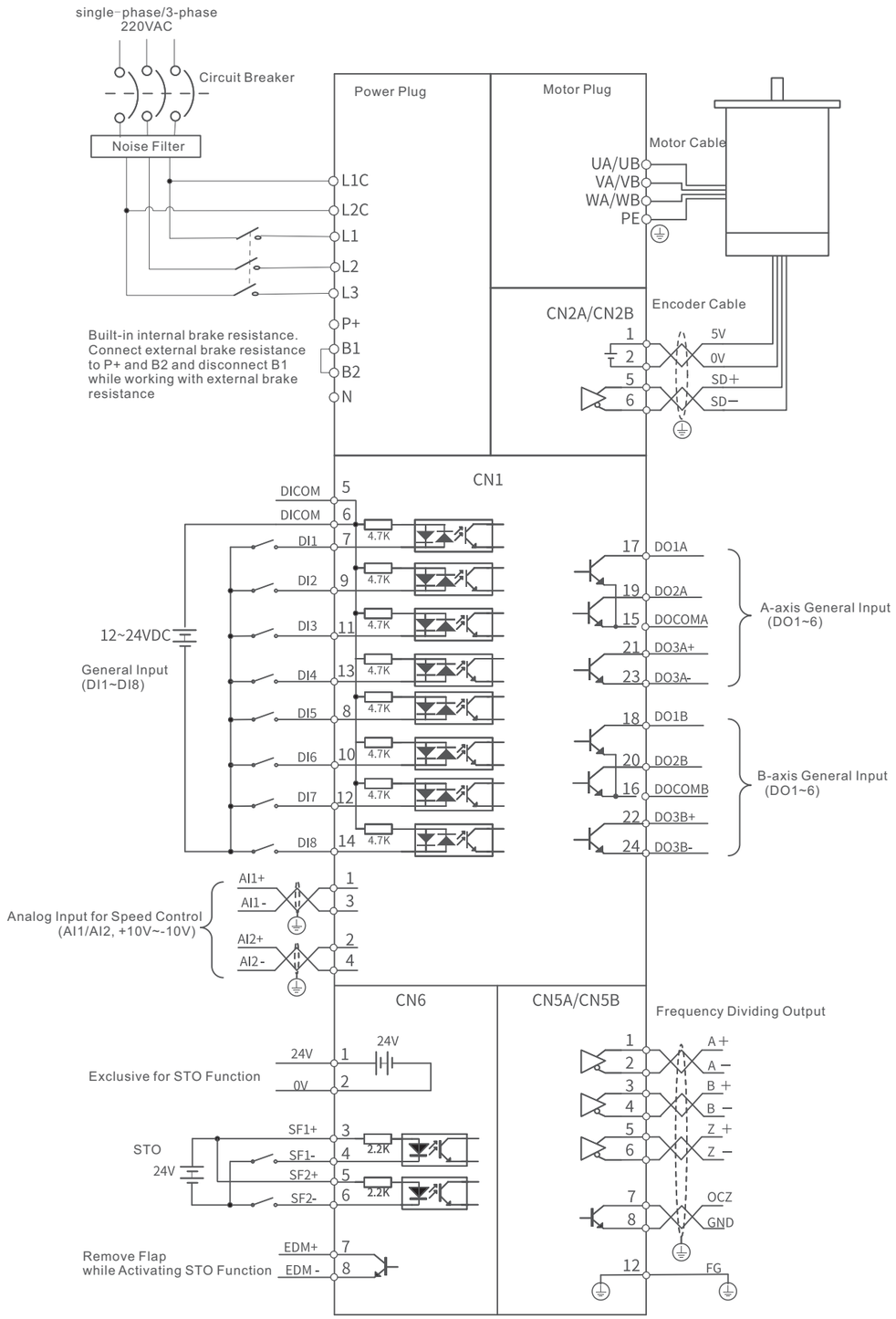

AC Servo Drives

EL8 Series (Coming Soon)

- Power range up to 1kW
- Velocity bandwidth up to 3.5kHz
- STO (IEC61508 SIL3)
- Pulse+dir/Analog input/RS485/EtherCAT/Profinet
- Up to 8Mpps for the frequency of pulse input
- Auto-tuning
- Auxiliary feedback port for fully feadback control

Pulse+dir

RS485

EtherCAT

PROFINET

Products Model

Model	Rated output power	Main power(VAC)	Rated output current [A]	Max output current [A]	Dimensions(mm)
EL8-**100	100W	Single-phase/3-phase AC220	2.0	4.8	150*150*43
EL8-**400	400W	Single-phase/3-phase AC220	3.5	10.3	150*150*43
EL8-**750	750W	Single-phase/3-phase AC220	5.5	15.6	172*150*55
EL8-**1000	1000W	Single-phase/3-phase AC220	7.0	21.2	172*150*55

Application

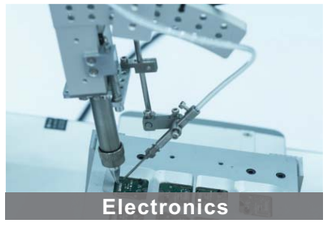
Electronics

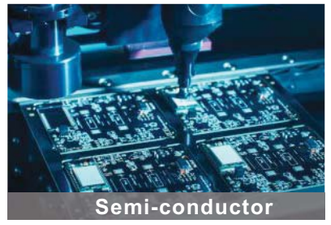
Semi-conductor

Lithium battery

Robotics

Laser cutting

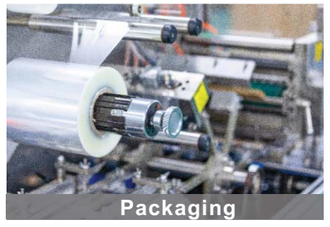
Packaging

AC Servo Motors

ELM Series

- Power range: 100W - 7.5kW
- Voltage: 220VAC/380VAC
- Feedback: 17-bit, 23-bit absolute encoder
- Frame size: 40mm, 60mm, 80mm, 130mm, 180mm

Part Numbers

ELM - 0050 L H 40 E □ - DC MS30

Series Num	
ELM	ELM series
ELM1S	ELM1S series
ELM2	ELM2 series
ELM2S	ELM2S series

Note: All above are AC servo series

Rated Output Power	
0050	50W
0100	100W
0200	200W
0400	400W
0750	750W
0850	850W
1000	1000W
1300	1300W
1500	1500W
1800	1800W
2000	2000W
2900	2900W
4400	4400W
5500	5500W
7500	7500W

Encoder Type	
F	17-bit magnetic single-turn
L	23-bit optical multi-turn

Inertia Ratio	
L	Low
M	Medium
H	High

Motor Version	
MS20	MS20 version
MS30	MS30 version

Motor Connector Type	
SS	Plastic plug, for frame 40/60/80
HH2	Aviation plug, for frame 40/60/80
DC	Direct connect plug, for frame 40/60/80
H	Aviation plug, for frame 130/180
HD	Aviation plug, for frame 130

Voltage	
Absence	220VAC
T	380VAC

	Shaft Type		Brake		Oil Seal	
	Rotary	Keyway	Yes	No	Yes	No
A	●		●		●	
B	●			●	●	
C	●		●			●
D	●			●		●
E		●	●		●	
F		●		●	●	
G		●	●			●
H		●		●		●

Frame Size	
40	40mm
60	60mm
80	80mm
130	130mm
180	180mm

Servo Motor with 17-bit Magnetic Single-turn Encoder

• Models

ELM Model		ELM1S-0050FH40E-**	ELM1S-0100FH40E-**	ELM1S-0200FH60E-**	ELM1S-0400FH60E-**	ELM1S-0750FH80E-**	ELM1S-1000FH80E-**
		ELM1S-0050FH40F-**	ELM1S-0100FH40F-**	ELM1S-0200FH60F-**	ELM1S-0400FH60F-**	ELM1S-0750FH80F-**	ELM1S-1000FH80F-**
Frame Size[mm]		40		60		80	
Rated Power[w]		50	100	200	400	750	1000
Rated Voltage[VAC]		220					
Rated Torque[Nm]		0.16	0.32	0.64	1.27	2.39	3.19
Peak Torque[Nm]		0.48	0.96	2.24	4.46	8.37	11.2
Rated Current[A]		0.85	0.85	2.1	2.1	4.1	5.7
Peak Current[A]		2.97	2.97	7.35	7.35	13.4	17.7
Rated Speed[r/min]		3000	3000	3000	3000	3000	3000
Peak Speed[r/min]		6000	6000	6000	6000	6000	6000
Inertia [kgm^2*10^{-4}]	Without Brake	0.0355	0.062	0.56	0.56	1.5	2.03
	With Brake	0.0456	0.0721	0.58	0.58	1.65	2.13
Weight (Kg)	Without Brake	0.32	0.46	1.3	1.3	2.12	2.7
	With Brake	0.54	0.68	1.55	1.55	2.7	3.2
Permissible Load to Shaft (N)	Radial	147	147	245	245	392	392
	Axial	88	88	74	74	147	147
Plug Type		SS Plug and HH2 Plug					
Matching Cable	Motor Cable	For Motor with SS Plug	CABLE-RZ*M*-S1(V3.0)	For Motor with HH2 Plug		CABLE-RZH*M*-113-TS without Brake CABLE-RZSH*M*-113-TS with Brake	
	Encoder Cable		CABLE-7BM*M*-Z(V3.0)			CABLE-BMH*M*-113-TS	
	Brake Cable		CABLE-SC*M*-S(V3.0)			/	
Matching Drive	Priority	EL6-**400*				EL6-**750*	EL6-**1000*
	Optional	ELP-**400*				ELP-**750*	ELP-**1000*

• Dimensions

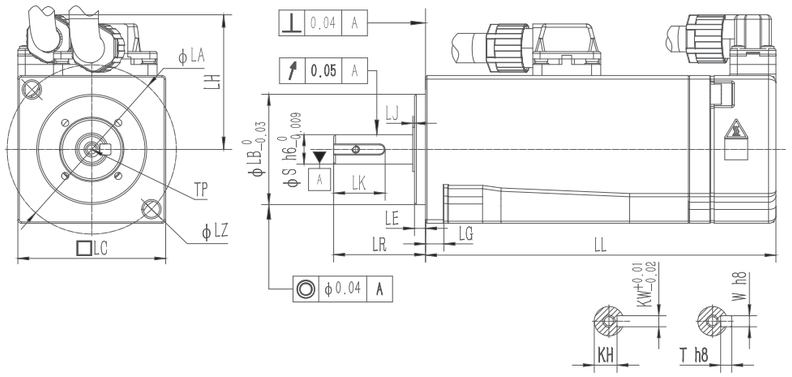

Motor Series	LL	LC	LR	LA	LZ	LH	LG	LE	LJ	S	LB	TP	LK	KH	kW	W	T
ELM1S-0050FH40*-**	56.7 (84)	40	25	46	4.5	35MAX	5	3	3	8	30	M3X8	14	6.2	3	3	3
ELM1S-0100FH40*-**	67.7 (95)	40	25	46	4.5	35MAX	5	3	3	8	30	M3X8	14	6.2	3	3	3
ELM1S-0200FH60*-**	71.6 (100.9)	60	30	70	5.5	45MAX	6.6	3	3	14	50	M5X12	22.5	11	5	5	5
ELM1S-0400FH60*-**	88.8 (118.1)	60	30	70	5.5	45MAX	6.6	3	3	14	50	M5X12	22.5	11	5	5	5
ELM1S-0750FH80*-**	90.9 (121.9)	80	35	90	6.5	55MAX	8.1	3	3	19	70	M5X15	25	15.5	6	6	6
ELM1S-1000FH80*-**	90.9 (121.9)	80	35	90	6.5	55MAX	8.1	3	3	19	70	M5X15	25	15.5	6	6	6

• Torque-Speed Curves

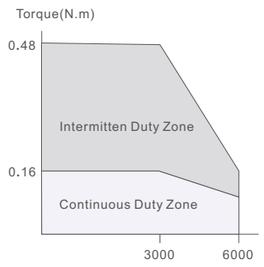

50W Motor

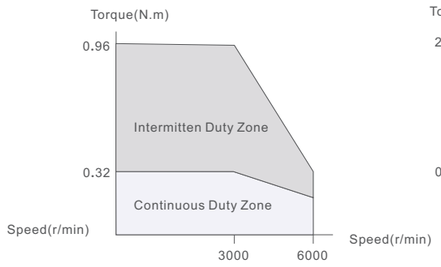

100W Motor

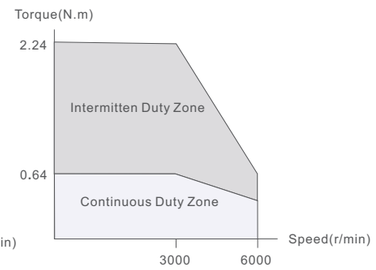

200W Motor

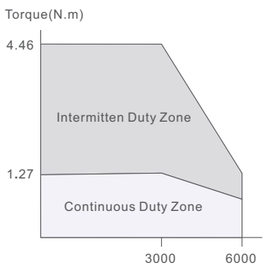

400W Motor

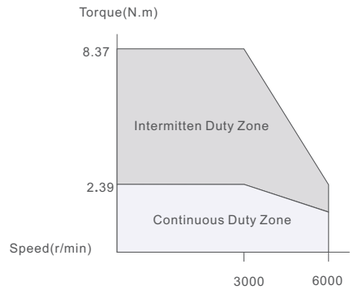

750W Motor

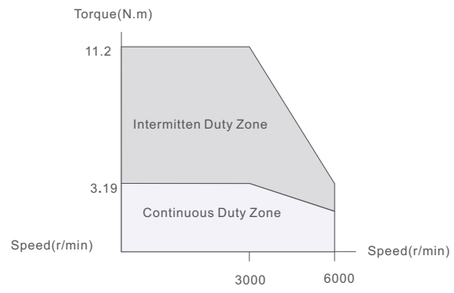

1000W Motor

Servo Motor with 23-bit Optical Multi-turn Encoder

• Models

ELM Model		ELM2-0050LH40*-SS	ELM2-0100LH40*-SS	ELM2-0200LH60*-SS	ELM2-0400LH60*-SS	ELM2-0750LH80*-SS	ELM2-1000LH80*-SS
		ELM2S-0050LH40*-DC	ELM2S-0100LH40*-DC	ELM2S-0200LH60*-DC	ELM2S-0400LH60*-DC	ELM2S-0750LH80*-DC	ELM2S-1000LH80*-DC
Frame Size [mm]		40		60		80	
Rated Power [W]		50	100	200	400	750	1000
Rated Voltage [VAC]		220					
Rated Torque [Nm]		0.16	0.32	0.64	1.27	2.39	3.19
Peak Torque [Nm]		0.48	0.96	2.24	4.46	8.37	11.2
Rated Current [A]		0.85	0.85	1.5	2.1	4.1	5.7
Peak Current [A]		2.97	2.97	4.7	7.35	13.4	17.7
Rated Speed [r/min]		3000	3000	3000	3000	3000	3000
Peak Speed [r/min]		6000	6000	6000	6000	6000	6000
Inertia [kgm^2*10^{-4}]	Without Brake	0.0355	0.062	0.29	0.56	1.5	2.03
	With Brake	0.0456	0.0721	0.31	0.58	1.65	2.13
Weight (Kg)	Without Brake	0.32	0.46	0.9	1.3	2.12	2.7
	With Brake	0.54	0.68	1.3	1.55	2.7	3.2
Permissible Load to Shaft (N)	Radial	147	147	245	245	392	490
	Axial	88	88	74	74	147	196
Plug Type		SS Plug and DC Plug					
Matching Cable	Motor Cable	For Motor with SS Plug	CABLE-RZ*M*-S1(V3.0)		For Motor with DC Plug	CABLE-RZH*M*-114-TS without Brake CABLE-RZSH*M*-114-TS with Brake	
	Encoder Cable		CABLE-7BMA*M*-Z(V3.0)			CABLE-BMAH*M*-124-TS	
	Brake Cable		CABLE-SC*M*-S(V3.0)			/	
Matching Drive	Priority	2EL7-EC200S			/	ELP-**750* 2EL7-EC750S	ELP-**1000* 2EL7-EC1000S
		ELP-**400* 2EL7-EC400S					
	Optional	EL6-**400*				EL6-**750*	EL6-*1000*

• Dimensions

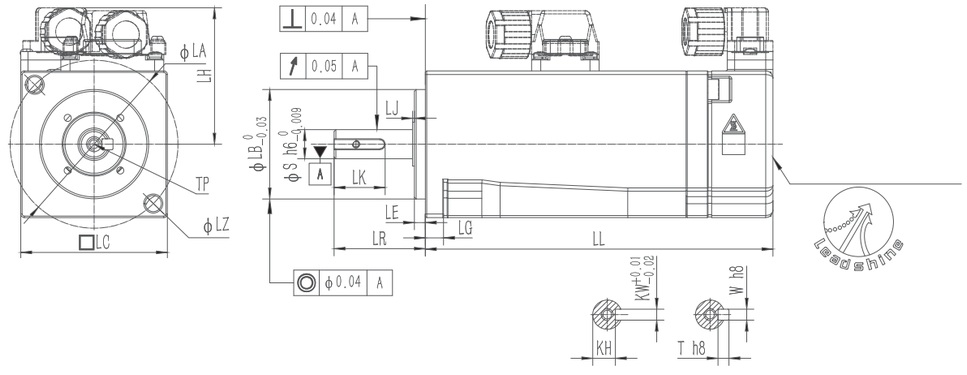

Motor Series	LL	LC	LR	LA	LZ	LH	LG	LE	LJ	S	LB	TP	LK	KH	kW	W	T
ELM2*-0050LH40*-** **	56.7 (84)	40	25	46	4.5	35MAX	5	3	3	8	30	M3X8	14	6.2	3	3	3
ELM2*-0100LH40*-** **	67.7 (95)	40	25	46	4.5	35MAX	5	3	3	8	30	M3X8	14	6.2	3	3	3
ELM2*-0200LH60*-** **	71.6 (100.9)	60	30	70	5.5	45MAX	6.6	3	3	14	50	M5X12	22.5	11	5	5	5
ELM2*-0400LH60*-** **	88.8 (118.1)	60	30	70	5.5	45MAX	6.6	3	3	14	50	M5X12	22.5	11	5	5	5
ELM2*-0750LH80*-** **	90.9 (121.9)	80	35	90	6.5	55MAX	8.1	3	3	19	70	M5X15	25	15.5	6	6	6
ELM2*-1000LH80*-** **	103.9 (134.9)	80	35	90	6.5	55MAX	8.1	3	3	19	70	M5X15	25	15.5	6	6	6

ELM Model		ELM-0850LH130E-HD	ELM-1300LH130E-HD	ELM-1800LH130E-HD
		ELM-0850LH130F-HD	ELM-1300LH130F-HD	ELM-1800LH130F-HD
Frame Size[mm]		130	130	130
Rated Power[W]		850	1300	1800
Rated Voltage[VAC]		220		
Rated Torque[Nm]		5.39	8.4	11.5
Peak Torque[Nm]		13.5	21	28.75
Rated Current[A]		6.5	9.5	9
Peak Current[A]		16.3	23.8	22.5
Rated Speed[r/min]		1500	1500	1500
Peak Speed[r/min]		3000	3000	2000
Inertia [kgm^2*10^{-4}]	Without Brake	13.88	8.5	20.59
	With Brake	15.78	8.95	22.26
Weight (Kg)	Without Brake	5.6	6.2	7.5
	With Brake	6.9	8.3	8.8
Permissible Load to Shaft (N)	Radial	490	490	490
	Axial	196	196	196
Plug Type		H Plug and HD Plug		
Matching Cable	Motor Cable	For Motor with HD Plug	CABLE-RZ*M*-HD(V2.0)	
	Encoder Cable		CABLE-7BMA*M*-HD(V3.0)	
	Brake Cable		CABLE-SC*M*-HD(V3.0)	

• Dimensions

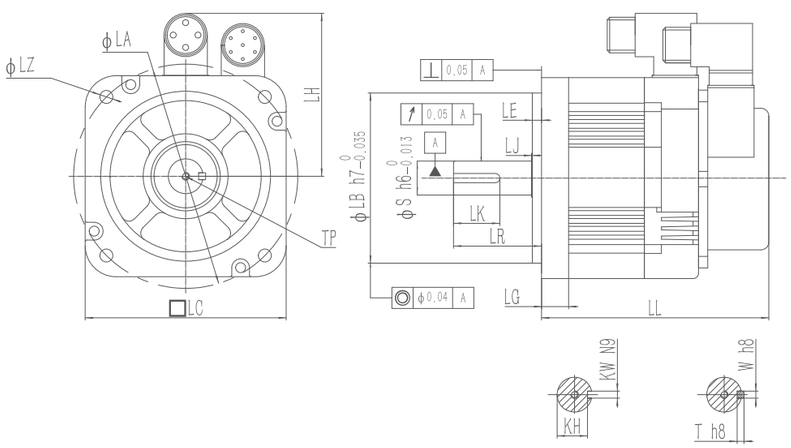

Motor Series	LL	LC	LR	LA	LZ	LH	LG	LE	LJ	S	LB	TP	LK	KH	kW	W	T
ELM-0850LH130F-HD	147	130	57	145	8.5	106	17.5	6	0.5	19	110	M5X12	30	16	5	5	5
ELM-0850LH130E-HD	172	130	57	145	8.5	106	17.5	6	0.5	19	110	M5X12	30	16	5	5	5
ELM-1300LH130F-HD	168	130	57	145	8.5	106	17.5	6	0.5	22	110	M5X12	30	18.5	6	6	6
ELM-1300LH130E-HD	192	130	57	145	8.5	106	17.5	6	0.5	22	110	M5X12	30	18.5	6	6	6
ELM-1800LH130F-HD	195	130	57	145	8.5	106	17.5	6	0.5	24	110	M5X15	30	19	8	8	8
ELM-1800LH130E-HD	219	130	57	145	8.5	106	17.5	6	0.5	24	110	M5X15	30	19	8	8	8

ELM Model		ELM-1000LM130E-H	ELM-1500LM130E-H	ELM-2000LM130E-H	ELM-1800LH130ET-H
		ELM-1000LM130F-H	ELM-1500LM130F-H	ELM-2000LM130F-H	ELM-1800LH130FT-H
Frame Size[mm]		130			
Rated Power[W]		1000	1500	2000	1800
Rated Voltage[VAC]		220			380
Rated Torque[Nm]		4	6	7.7	11.5
Peak Torque[Nm]		10	15	19.3	34.5
Rated Current[A]		4	6	7.5	8.2
Peak Current[A]		10	15	18.8	24.6
Rated Speed[r/min]		2500	2500	2500	1500
Peak Speed[r/min]		3000	3000	3000	3000
Inertia [kgm^2*10^{-4}]	Without Brake	8.5	12.6	15.3	20.59
	With Brake	8.95	14.08	16.8	22.26
Weight (Kg)	Without Brake	6.2	7.4	8.3	7.5
	With Brake	8.3	9.5	11	8.8
Permissible Load to Shaft (N)	Radial	490	490	490	490
	Axial	196	196	196	196
Plug Type		H Plug			
Matching Cable	Motor Cable	For Motor with H Plug	CABLE-RZ*M*-H(V2.0)		
	Encoder Cable		CABLE-7BMA*M*-HZ(V3.0)		
	Brake Cable		CABLE-SC*M*-H(V3.0)		
Matching Drive	Priority	ELP-**1000*	ELP-**1500*	ELP-**2000*	ELP-**1000*
	Optional	EL6-**1000*	/	/	EL6-**1000*

• Dimensions

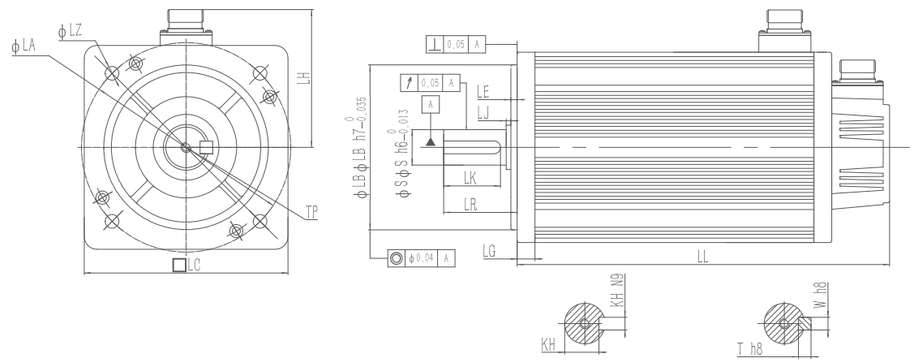

Motor Series	LL	LC	LR	LA	LZ	LH	LG	LE	LJ	S	LB	TP	LK	KH	kW	W	T
ELM-1000LM130F-H	166	131	57	145	9	111	14	5	2	22	110	M6X20	40	18.5	6	6	6
ELM-1000LM130E-H	223	131	57	145	9	111	14	5	2	22	110	M6X20	40	18.5	6	6	6
ELM-1500LM130F-H	179	131	57	145	9	111	14	5	2	22	110	M6X20	40	18.5	6	6	6
ELM-1500LM130E-H	236	131	57	145	9	111	14	5	2	22	110	M6X20	40	18.5	6	6	6
ELM-2000LM130F-H	192	131	57	145	9	111	14	5	2	22	110	M6X20	40	18.5	6	6	6
ELM-2000LM130E-H	270	131	57	145	9	111	14	5	2	22	110	M6X20	40	18.5	6	6	6
ELM-1800LH130FT-H	195	130	57	145	8.5	106	17.5	6	0.5	24	110	M5X15	30	19	8	8	8
ELM-1800LH130ET-H	219	130	57	145	8.5	106	17.5	6	0.5	24	110	M5X15	30	19	8	8	8

ELM Model		ELM-2900LM180ET-H ELM-2900LM180FT-H	ELM-4400LM180ET-H ELM-4400LM180FT-H	ELM-5500LM180ET-H ELM-5500LM180FT-H	ELM-7500LM180ET-H ELM-7500LM180FT-H
Frame Size[mm]		180			
Rated Power[W]		2900	4400	5500	7500
Rated Voltage[VAC]		380			
Rated Torque[Nm]		18.6	28.4	35	48
Peak Torque[Nm]		46.5	71.1	87.5	119
Rated Current[A]		11.8	15.7	20.6	25.7
Peak Current[A]		29.5	39.3	51.5	64.5
Rated Speed[r/min]		1500	1500	1500	1500
Peak Speed[r/min]		3000	3000	3000	3000
Inertia [kgm^2*10^{-4}]	Without Brake	56.8	78.2	109	130
	With Brake	65.3	86	118	140
Weight (Kg)	Without Brake	16.3	21.4	25.8	32.3
	With Brake	21.8	26.5	31.1	37.6
Permissible Load to Shaft (N)	Radial	1470	1750	1750	1750
	Axial	490	580	580	580
Plug Type		H Plug			
Matching Cable	Motor Cable	CABLE-RZA*M*-H-180(V1.0) For Motor of 2900W CABLE-RZB*M*-H-180(V1.0) For Motor of 4400W/5500W/7500W			
	Encoder Cable	CABLE-7BMA*M*-HZ-180(V1.0)			
	Brake Cable	CABLE-SC*M*-H-180(V1.0)			
Matching Drive	Priority	EL7-EC3000T3	EL7-EC4400T3	EL7-EC5500T3	EL7-EC7500T3
	Optional	/	/	/	/

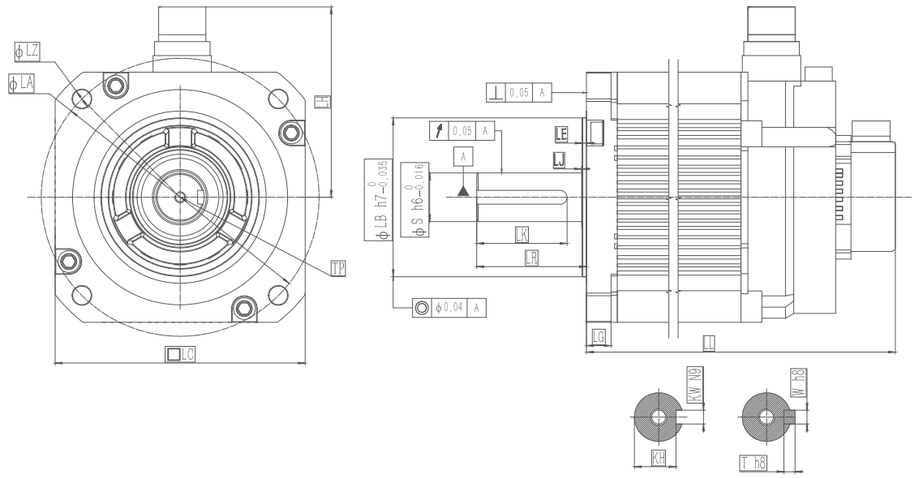

Motor Series	LL	LC	LR	LA	LZ	LH	LG	LE	LJ	S	LB	TP	LK	KH	kW	W	T
ELM-2900LM180FT-H	201	180	79	200	4-Φ13.5	134	18	3.2	0.3	35	114	M12X25	65	30	10	10	8
ELM-2900LM180ET-H	249	180	79	200	4-Φ13.5	134	18	3.2	0.3	35	114	M12X25	65	30	10	10	8
ELM-4400LM180FT-H	230	180	79	200	4-Φ13.5	134	18	3.2	0.3	35	114	M12X25	65	30	10	10	8
ELM-4400LM180ET-H	278	180	79	200	4-Φ13.5	134	18	3.2	0.3	35	114	M12X25	65	30	10	10	8
ELM-5500LM180FT-H	257	180	113	200	4-Φ13.5	134	18	3.2	0.3	42	114	M16X32	96	37	12	12	8
ELM-5500LM180ET-H	305	180	113	200	4-Φ13.5	134	18	3.2	0.3	42	114	M16X32	96	37	12	12	8
ELM-7500LM180FT-H	297	180	113	200	4-Φ13.5	134	18	3.2	0.3	42	114	M16X32	96	37	12	12	8
ELM-7500LM180ET-H	345	180	113	200	4-Φ13.5	134	18	3.2	0.3	42	114	M16X32	96	37	12	12	8

Torque-Speed Curves

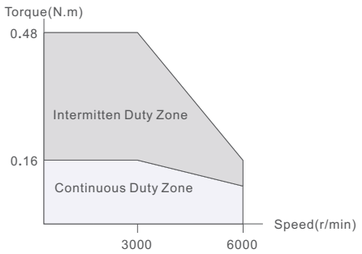

50W Motor

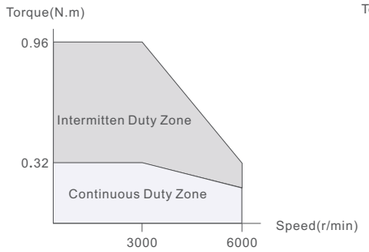

100W Motor

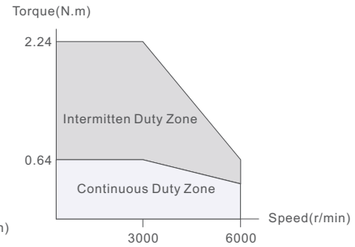

200W Motor

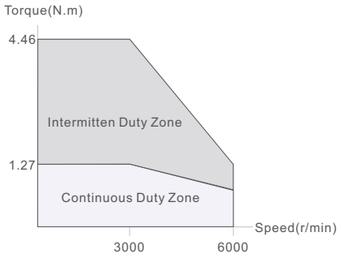

400W Motor

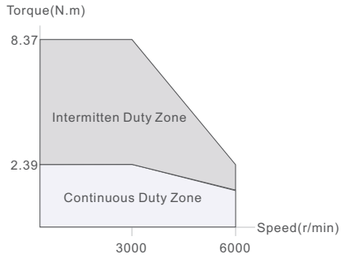

750W Motor

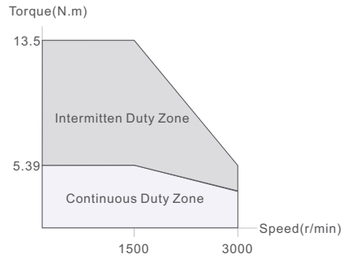

850W Motor

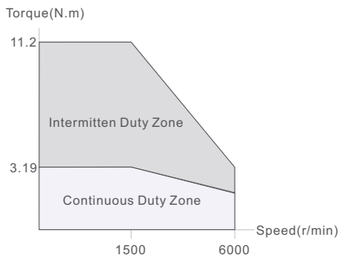

1000W Motor

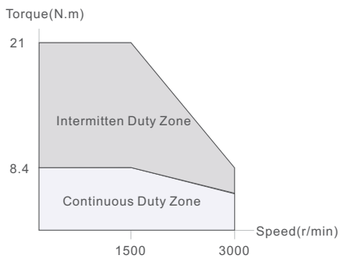

1300W Motor

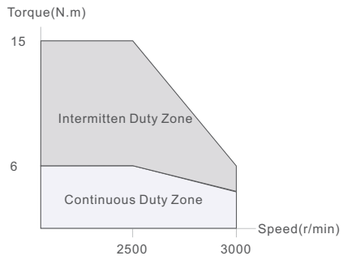

1500W Motor

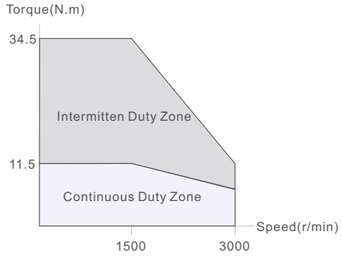

1800W Motor

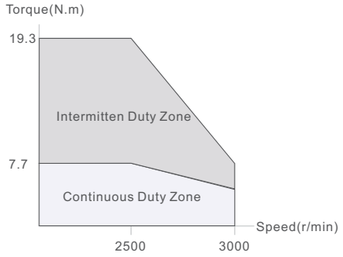

2000W Motor

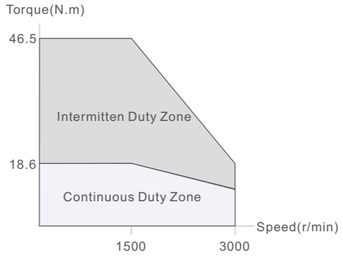

2900W Motor

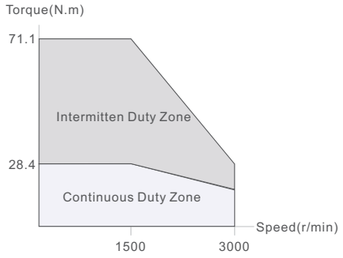

4400W Motor

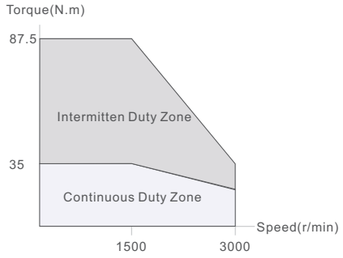

5500W Motor

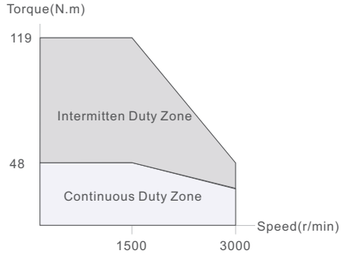

7500W Motor

Accessories

Each servo drive comes with:
(1) Power Connector
(2) Signal Connector
(3) Press Rod

Extention Cables

Power Cable

- Length options: 1.5M, 3M, 5M, 7M, 10M, 13M
- Connector options: Plastic plug Optional: Injection plug

Encoder Cable

- Length options: 1.5M, 3M, 5M, 7M, 10M, 13M
- Connector options: Plastic plug Optional: Injection plug

Brake Cable

- Length options: 1.5M, 3M, 5M, 7M, 10M, 13M
- Connector options: Plastic plug Optional: Injection plug

Configuration Cable

- Connect the drive to computer
- The interface standard is USB
- Mode: CABLE-USB1M5, CABLE-L6TS1M5

RS485/EtherCAT Communication Cable

- Model: CABLE-TX0M2-BUS
- Length options: 1.5M, 3M, 5M, 7M, 10M, 13M

Cable Details

Cable with SS Plug for Frame 40/60/80

(1) CABLE-RZ*M*-S1(V3.0) Motor Cable

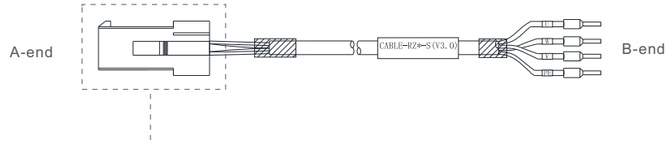

Material		Part No.	Description	Quantity
Motor Cable Parts	Plastic Shell	11600371	4pin female plastic shell 172159-1LS-17215901-AMP RoHS	1
	Pin Needle	11600353	Female needle 170362-1 RoHS AMP	4

Pin Definition			
Diagram	Pin Definition		
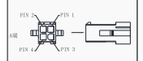	A-end	Color	B-end
	1	Blue	U
	2	Red	W
	3	Black	V
	4	Yellow/Green	PE

(2) CABLE-7BM*M*-Z(V3.0) Encoder Cable

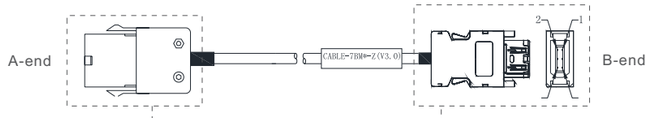

Material		Part No.	Quantity
Encoder Cable Parts	Plastic Shell	11600372	1
	Pin Needle	11600354	5

Material	Part No.	Quantity
Plug Connected to Drive	11600383	1

Pin Definition

A-end	B-end	Pin Definition

Color	Shield	White	Black	Blue	Pink
A-end	1	2	3	4	5
B-end	Shell	1	2	5	6
Definition	Shield	+5V	0V	5D+	5D-

(3) CABLE-SC*M*-S1(V3.0) Brake Cable

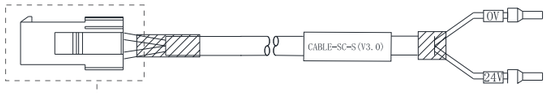

Material		Part No.	Quantity	Note
Brake Cable Parts	Plastic Shell	11600369	1	Only for motor with brake
	Pin Needle	11600353	2	Only for motor with brake

Pin Definition

Diagram	Pin Definition
	Blue: 0V Brown: 24V

Cable with HH2 Plug for Frame 40/60/80

(1) CABLE-RZH*M*-113-TS Motor Cable for Motor without Brake

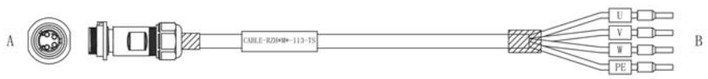

Material		Part No.	Quantity
Motor Cable Parts	Female Plug for Motor Cable	11600548	1
	Male Plug for Motor Cable	11600549	1

Pin Definition

Diagram	A-end	Color	B-end
	1	Blue	U
	2	Red	W
	3	Black	V
	4	Yellow/Green	PE

(2) CABLE-TZSH*M*-113-TS Motor Cable for Motor with Brake

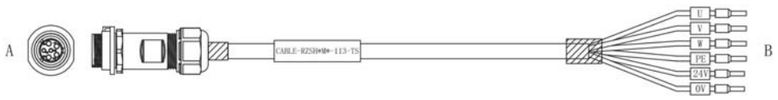

Material		Part No.	Quantity
Motor Cable Parts	Female Plug for Motor Cable	11600546	1
	Male Plug for Motor Cable	11600547	1

Pin Definition

Diagram	A-end	Color	B-end
	1	Blue	U
	2	Red	W
	3	Black	V
	4	Yellow/Green	PE
	5	Black	0V
	6	Red	24V

(3) CABLE-BMH*M*-113-TS Encoder Cable

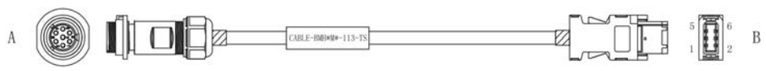

Material		Part No.	Quantity
Encoder Cable Parts	Female Plug for Encoder Cable	11600546	1
	Male Plug for Encoder Cable	11600547	1
	Plug Connected to Drive	11600383	1

Pin Definition

Diagram	A-end	Color	B-end	Definition
	1	Weave	Shell	PE
	2	White	1	5V
	3	Black	2	0V
	4	Blue	5	SD+
	5	Pink	6	SD-

Cable with DC Plug for Frame 40/60/80

(1) CABLE-RZH*M*-114-TS Motor Cable for Motor without Brake

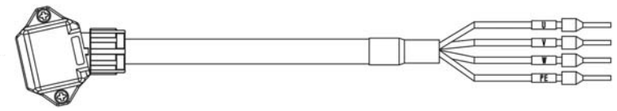

Pin Definition

Diagram	A-end	Color	B-end
	1	Blue	U
	2	Red	W
	3	Black	V
	4	Yellow/Green	PE

(2) CABLE-RZH*M*-114-TS Motor Cable for Motor with Brake

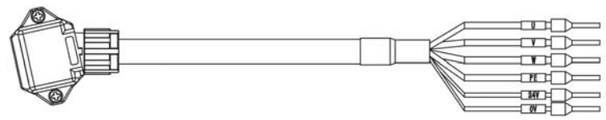

Pin Definition

Diagram	A-end	Color	B-end
	1	Blue	U
	2	Red	W
	3	Black	V
	4	Yellow/Green	PE
	5	Black	0V
	6	Red	24V

(3) CABLE-BMAH*M*-124-TS Encoder Cable

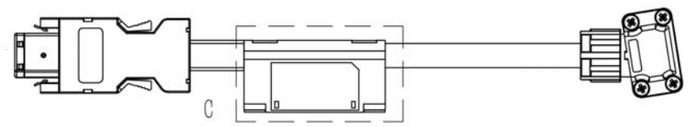

Pin Definition

Diagram	A-end	Definition	B-end	Diagram	C-end
	1	PE	1		
	2	5V	2		
	3	0V	3		
	4	SD+	4		
	5	SD-	5		
	6	BAT+	6		1
	7	BAT-	7		2

Cable with H Plug for Frame 130

(1) CABLE-RZ*M*-HD(V2.0) Power Cable

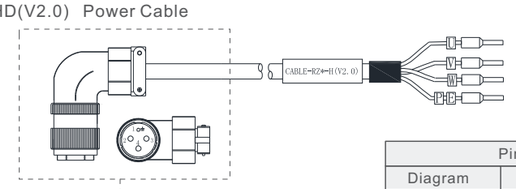

Material		Part No.	Quantity
Motor Cable Parts	Aviation Plug for Motor Cable	11600072	1

Pin Definition

Diagram	Pin Definition		
	1	PE	Yellow
	2	U	Red
	3	V	Green
	4	W	Black

(2) CABLE-7BM*M*-HZ(V3.0) Encoder Cable

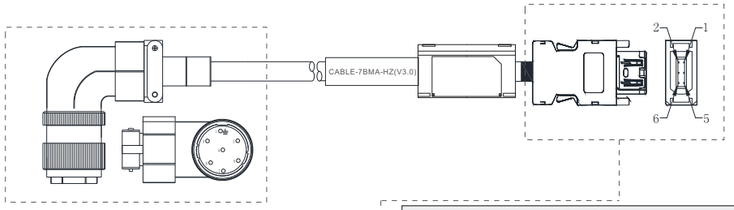

Material		Part No.	Quantity
Encoder Cable Parts	Aviation Plug for Encoder Cable	11600076	1

Material		Part No.	Quantity
Encoder Cable Parts	Plug Connected to Drive	11600383	1

Pin Definition

A-end	B-end	Pin Definition

Color	Shield	White	Black	Blue	Purple	Red	Yellow
A-end	1	2	3	4	5	6	7
B-end	Shell	1	2	5	6	/	/
Definition	Shield	+5V	0V	SD+	SD-	BAT+	BAT-

(3) CABLE-SC*M*-HD(V3.0) Brake Cable

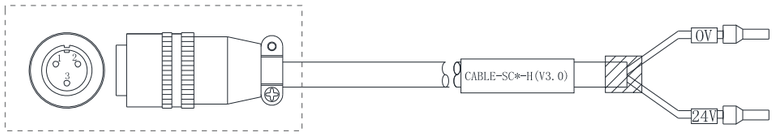

Material		Quantity	Notes
Brake Cable Parts	Aviation Plug for Brake Cable	1	Only for motor with brake

Pin Definition

Diagram	Pin Definition	
	1	0V
	2	24V

Cable with HD Plug for Frame 130

(1) CABLE-RZ*M*-HD(V2.0) Motor Cable

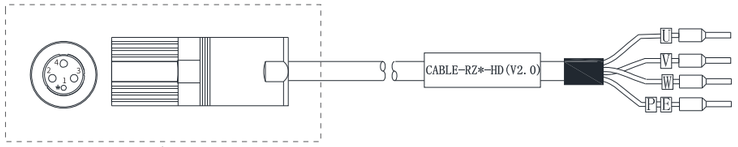

Material		Part No.	Quantity
Motor Cable Parts	Aviation Plug for Motor Cable	11600077	1

Pin Definition

Diagram	Pin Definition		
	1	PE	Yellow
	2	U	Red
	3	V	Green
	4	W	Black

(2) CABLE-7BM*M*-HD(V3.0) Encoder Cable

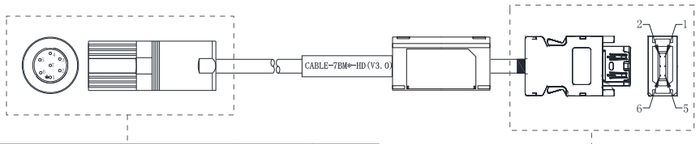

Material		Part No.	Quantity
Encoder Cable Parts	Aviation Plug for Encoder Cable	11600079	1

Material		Part No.	Quantity
Encoder Cable Parts	Plug Connected to Drive	11600383	1

Pin Definition

A-end	B-end	Pin Definition

Color	Shield	Red	Black	Blue	Blue/Black	Brown	Brown/Black
A-end	1	7	5	6	4	3	2
B-end	Shell	1	2	5	6	/	/
Definition	Shield	+5V	0V	SD+	SD-	BAT+	BAT-

(3) CABLE-SC*M*-HD(V3.0) Brake Cable

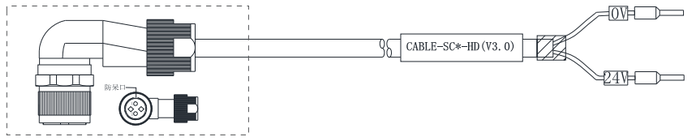

Material		Part No.	Quantity	Notes
Brake Cable Parts	Aviation Plug for Brake Cable	11600078	1	Only for motor with brake

Pin Definition

Diagram	Pin Definition	
	1	0V
	2	24V

Cable with Aviation Plug for Frame 180

(1) CABLE-RZ*M*-H(V2.0) Motor Cable

Material		Part No.	Quantity
Motor Cable Parts	Aviation Plug for Motor Cable	11600980	1

Pin Definition

Diagram	A-end	Color	B-end
	1	Blue	U
	2	Red	W
	3	Black	V
	4	Yellow/Green	PE

(2) CABLE-7BMA*M*-HZ-180(V1.0) Encoder Cable

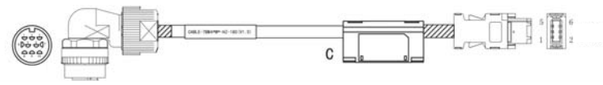

Material		Part No.	Quantity
Encoder Cable Parts	Aviation Plug for Encoder Cable	11600979	1
	Plug Connected to Drive	11600383	1
	Battery Box	82600020	1

Pin Definition

Diagram	A-end	Color	B-end	C-end	Definition
	10	Weave	Shell		PE
	2	White	1		5V
	3	Black	2		0V
	4	Blue	5		SD+
	5	Pink	6		SD-
	6	Red		1	E+
	7	Black		2	E-

(3) CABLE-SC*M*-H(V1.0) Brake Cable

Material		Part No.	Quantity
Brake Cable Parts	Aviation Plug for Brake Cable	11600978	1

Pin Definition

Diagram	A-end	Color	B-end
	1	Black	0V
	2	Red	24V

DC Servo Drives

ELD2 Series

ELD2 Series DC Servo Drives

ELD2 series DC servo drive, power range from 50W to 2.5kW, adopt special DC input, motion control product designed for machines and applications that request a best balance between reasonable cost and outstanding performance with MFC/vibration suppression.

- Voltage : 24-70VDC
- Power range : 50W - 2.5kW
- Up to 180Amp peak current
- Compact size
- Pulse+Direction, analog input
- Modbus,CANopen
- Brushless motor & Brushed motor suitable

Easy Tuning

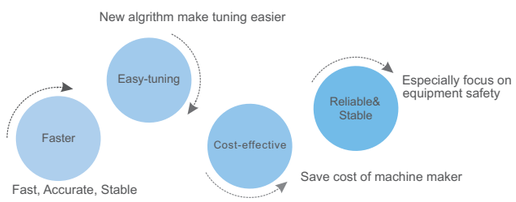

Motion Studio

- Convenient GUI user interface
- Easy Tuning
- Real-time motion state monitoring
- Error history and resolution guide

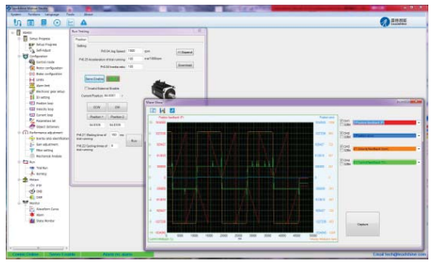

Supported Network

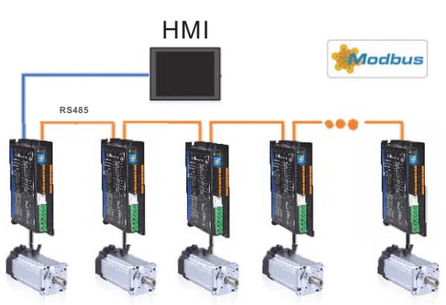

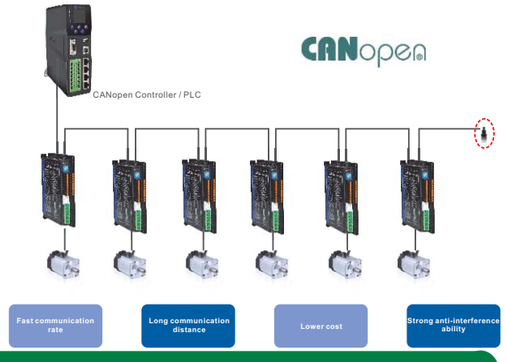

Part Numbers

ELD2 - RS 7030 B

Servo Series	
ELD2	single axis

Command Source	
CAN	CANopen
RS	RS485(Modbus RTU)/Pulse+Dir/Analog

Rated Output Power	
7005	24-70VDC, 5Arms Cont
7010	24-70VDC, 10Arms Cont
7015	24-70VDC, 15Arms Cont
7020	24-70VDC, 20Arms Cont
7030	24-70VDC, 30Arms Cont
7040	24-70VDC, 40Arms Cont
7060	24-70VDC, 60Arms Cont

Brake	
B	Brake output

Specifications

Power & Environment					
Driver Model		ELD2-RS7005 ELD2-CAN7005B	ELD2-RS7010 ELD2-CAN7010B	ELD2-RS7015B ELD2-CAN7015B	ELD2-RS7020B ELD2-CAN7020B
Size(mm)		118*75.5*25.5(RS7005) 140*79.5*25.5(CAN7005B)	118*75.5*25.5(RS7010) 140*79.5*25.5(CAN7010B)	175*101.5*33	175*100.5*33
Rated Power (kW)		0.1	0.4	0.6	0.75
Rated Output Current (Arms)		5	10	15	20
Max Output Current (Apeak)		21	35(RS7010) 42(CAN7010)	45	80
Main Power	Voltage (V)	DC24-70	DC24-70	DC24-70	DC24-70
	Current (Arms)	5Arms (≤48VDC)	10Arms (≤48VDC)	15Arms (≤48VDC)	20Arms (≤48VDC)
		3.5Arms (>48VDC)	7Arms (>48VDC)	11Arms (>48VDC)	14Arms (>48VDC)
Auxiliary power	Voltage (V)	-	-	-	-
Control Method		IGBT PWM Sinusoidal Wave Drive			
Overload		300%			
Brake Resistor		External Connection			
Communication Interface		RS485/CAN			
Protection Rank		IP20			

Power & Environment				
Driver Model		ELD2-RS7030B ELD2-CAN7030B	ELD2-RS7040B ELD2-CAN7040B	ELD2-RS7060B ELD2-CAN7060B
Size(mm)		175*100.5*33	194*103*41	194*103*41
Rated Power (kW)		1.2	1.5	2.5
Rated Output Current (Arms)		30	40	60
Max Output Current (Apeak)		90	120	180
Main Power	Voltage (V)	DC24-70	DC24-70	DC24-70
	Current (Arms)	30Arms (≤48VDC)	40Arms (≤48VDC)	60Arms (≤48VDC)
		21Arms (>48VDC)	28Arms (>48VDC)	42Arms (>48VDC)
Auxiliary power	Voltage (V)	-	DC24~70	DC24~70
Control Method		IGBT PWM Sinusoidal Wave Drive		
Overload		300%		
Brake Resistor		External Connection		
Communication Interface		RS485/CAN		
Protection Rank		IP20		

CANopen Specifications	
Link Layer Protocol	CAN Field-bus
Application Layer Protocol	CANopen protocol
CAN-ID Type	CAN 2.0A
Communication Rate	1Mbit/s, 500Kbit/s, 250Kbit/s, 125Kbit/s, 100Kbit/s, 50Kbit/s, 20Kbit/s
Sub-protocol	DS 301 V4.02: CANopen application layer protocol and communication protocol DSP 402 V2.0: Device profile for drives and motion control
CANopen Length	0 – 8-bit
Support Service	NMT: Network Management Service SDO: Service Data Object PDO: Process Data Object Devices Monitor: Node protection and heartbeat message SYNC: Synchronous generator and synchronous detection, applied to the PDO transmission EMCY: Emergency object Services
PDO Transmission Modes	Time trigger, event trigger, asynchronization/synchronization trigger(configurable)
PDO Number	4 TPDOs, 4 RPDOs
Control Modes	PP (Profile Position) PV (Profile Velocity) PT (Profile Torque) HM (Homing)

Communication & Connection		
	ELD2-RS	ELD2-CAN
Pulse Input	2 fast pulse input, 5V-24V only	-
Pulse Encoder Output	5V differential outputs, A/B phase	5V differential outputs, A/B phase
Digital Input/Output	4 programmable OC inputs, 2 programmable OC outputs, 24V	4 programmable OC inputs, 2 programmable OC outputs, 24V
Analog Input	1 analog input: -10V to +10V	-
Feedback Supported	1000-Line, 2500-Line, 17-bit incremental encoder	

Matched Motors	
Motor Model	ELVM Series / Third-party Brushless + Brushed motor
Power Range	50W - 2.5kW
Voltage Range	24 - 70VDC
Encoder Type	1000-Line, 2500-Line, 17-bit
Motor Size	40mm, 42mm, 57mm, 60mm, 80mm 110mm, 130mm Frame Size
Other Requirements	Brake. oil-seal. protection level. shaft & connector can be customized

Mechanical Dimensions

- **ELD2-RS7005/ELD2-RS7010**

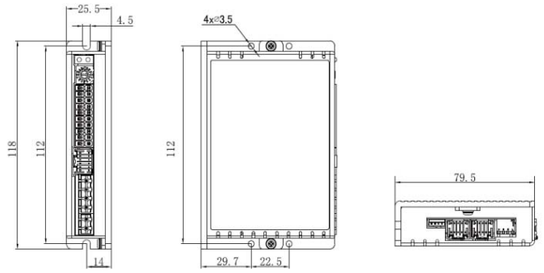

- **ELD2-CAN7005B/ELD2-CAN7010B**

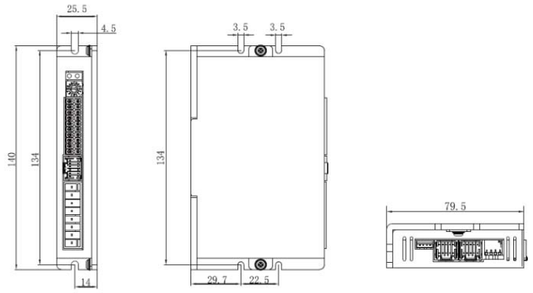

- **ELD2-**7015B/ELD2-**7020B/ELD2-**7030B**

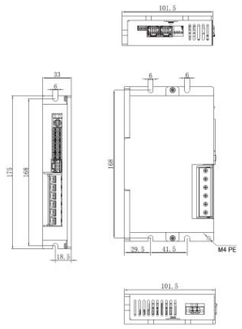

- **ELD2-**7040B/7060B**

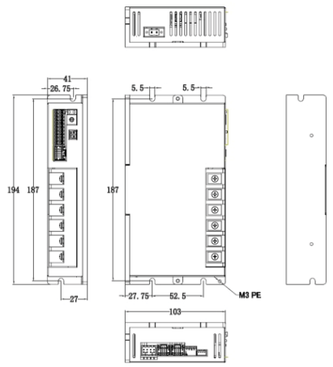

Typical Applications

Printing Machines

Logistics

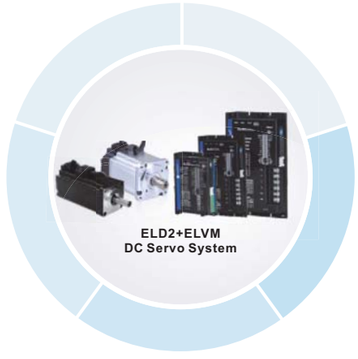

AGV Machines

Medical

DC Servo Drives

2ELD2 Series

NEW

2ELD2 Series DC Servo Drives

The 2ELD2 series is a new low voltage DC servo drive developed from Leadshine, dual-axis, that one 2ELD2 drive can drive two DC servo motors at the same time. 2ELD2 series keep the same performance of ELD2 series, relying on the special dual-axis structure, 2ELD2 series achieve less wiring, space saving, energy saving, while having a high cost performance. 2ELD2 series can be applied to mobile robots, logistics, electronics, CNC machine and other industries.

- Each axis power range up to 1.2kW
- Each axis current range up to 90Amp
- STO and Auxiliary input power
- Pulse+Direction, analog input
- Modbus, CANopen
- Brushless motor & Brushed motor suitable

Easy Tuning

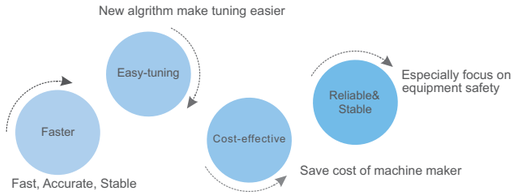

Motion Studio

- Convenient GUI user interface
- Easy Tuning
- Real-time motion state monitoring
- Error history and resolution guide

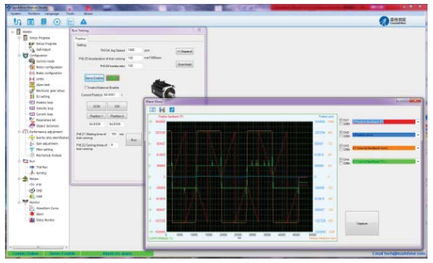

Supported Network

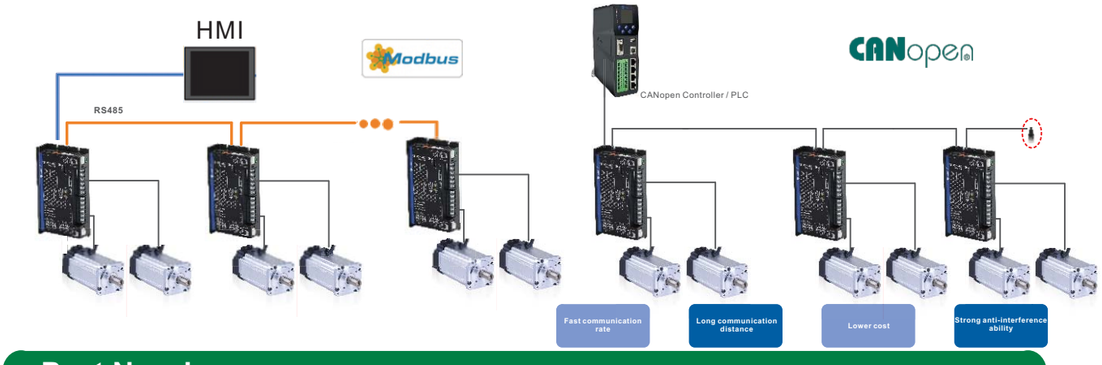

Part Numbers

2ELD2 - RS 7030 B

Servo Series	
2ELD2	dual axis

Command Source	
CAN	CANopen/Analog input
RS	RS485(Modbus RTU)/Pulse+Dir

Rated Output Power	
7020	24-70VDC, 20Arms Cont
7030	24-70VDC, 30Arms Cont

Brake	
B	Brake output

Specifications

Power & Environment			
Driver Model		2ELD2-RS7020B 2ELD2-CAN7020B	2ELD2-RS7030B 2ELD2-CAN7030B
Size(mm)		194*103*41	194*103*41
Rated Power (kW)/Each channel		0.75	1.2
Rated Output Current (Arms) /Each channel		20	30
Max Output Current (Apeak) /Each channel		80	90
Main Power	Voltage (V)	DC24-70	DC24-70
	Current (Arms)	40Arms (≤48VDC)	60Arms (≤48VDC)
		28Arms (>48VDC)	42Arms (>48VDC)
Auxiliary power	Voltage (V)	DC24~70	DC24~70
Control Method		IGBT PWM Sinusoidal Wave Drive	
Overload		300%	
Brake Resistor		External Connection	
Communication Interface		RS485/CAN	
Protection Rank		IP20	

CANopen Specifications	
Link Layer Protocol	CAN Field-bus
Application Layer Protocol	CANopen protocol
CAN-ID Type	CAN 2.0A
Communication Rate	1Mbit/s, 500Kbit/s, 250Kbit/s, 125Kbit/s, 100Kbit/s, 50Kbit/s, 20Kbit/s
Sub-protocol	DS 301 V4.02: CANopen application layer protocol and communication protocol DSP 402 V2.0: Device profile for drives and motion control
CANopen Length	0 – 8-bit
Support Service	NMT: Network Management Service SDO: Service Data Object PDO: Process Data Object Devices Monitor: Node protection and heartbeat message SYNC: Synchronous generator and synchronous detection, applied to the PDO transmission EMCY: Emergency object Services
PDO Transmission Modes	Time trigger, event trigger, asynchronization/synchronization trigger(configurable)
PDO Number	4 TPDOs, 4 RPDOs
Control Modes	PP (Profile Position) PV (Profile Velocity) PT (Profile Torque) HM (Homing)

Communication & Connection		
	2ELD2-RS	2ELD2-CAN
Pulse Input	2 fast pulse input, 5V-24V only	-
Pulse Encoder Output	5V differential outputs, A/B phase	5V differential outputs, A/B phase
Digital Input/Output	4 programmable OC inputs, 2 programmable OC outputs, 24V	4 programmable OC inputs, 2 programmable OC outputs, 24V
Analog Input	-	1 analog input: -10V to +10V
Feedback Supported	1000-Line, 2500-Line, 17-bit incremental encoder	

Matched Motors	
Motor Model	ELVM Series / Third-party Brushless + Brushed motor
Power Range	50W - 1.2kW
Voltage Range	24 - 70VDC
Encoder Type	1000-Line, 2500-Line, 17-bit
Motor Size	40mm, 42mm, 57mm, 60mm, 80mm 110mm, 130mm Frame Size
Other Requirements	Brake. oil-seal. protection level. shaft & connector can be customized

Mechanical Dimensions

- **2ELD2-**7020B/7030B**

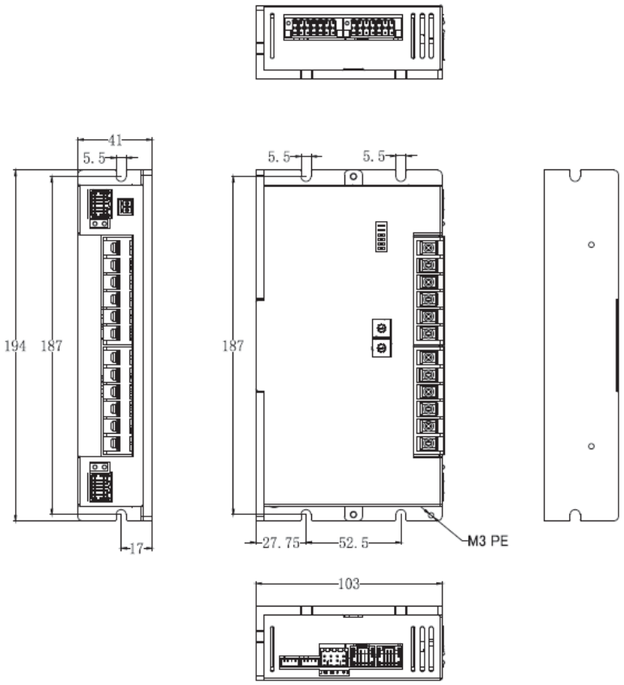

Typical Applications

Printing Machines

Logistics

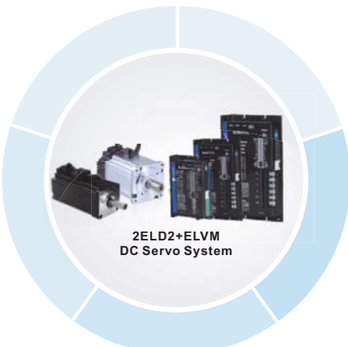

AGV Machines

Medical

DC Servo Motors

ELVM Series

NEW

- Power range: 50W - 1000W
- Frame size: 40mm,60mm,80mm;
- Voltage range: 24 - 60VDC
- Feedback: 2500-Line incremental encoder; 17-bit absolute encoder
- Protection:IP65

The ELVM series is a new low voltage AC servo motor series designed of Lead Shine with power ranging from 50W to 1000W,with 2500-Line incremental encoder or 17-bit/23-bit absolute encoder, featuring short length, high overload capacity, good vibration resistance and IP65 protection.

Part Numbers

ELVM 60 20 V36 E - L - M17 - HD

Motor Series	
ELVM	ELVM Series Motor

Motor Frame Size	
40	40mm
60	60mm
80	80mm

Rated Output Power	
05	50W
10	100W
20	200W
40	400W
60	600W
75	750W
100	1000W

Rated Voltage	
V24	24VDC
V36	36VDC
V48	48VDC
V60	60VDC

Connector	
HD	Round connector

Encoder Resolution	
B	2500-Line Incremental
M17	17-bit multi-turn absolute - Magnetic
E23	23-bit multi-turn absolute - Optical

Inertia	
L	Low
M	Medium
H	High

Brake and IP	
E	24VDC brake, IP65
F	No brake, Ip65

Servo Motors with 2500-Line/17-bit Encoders

• Models

ELVM Series		6020V24FH-** / 6020V24EH-**	6020V48FH-** / 6020V48EH-**	6040V24FH-** / 6040V24EH-**	6040V48FH-** / 6040V48EH-**	6060V48FH-** / 6060V48EH-**	8075V48FH-** / 8075V48EH-**	80100V48FH-** / 80100V48EH-**
Frame Size [mm]		60					80	
Rated Power [W]		200	200	400	400	600	750	1000
Voltage [VDC]		24	48	24	48	48	48	48
Rated Torque [Nm]		0.64	0.64	1.27	1.27	1.91	2.39	3.2
Rated Current [A]		10	6	19.9	10	15	19	28
Rated Speed [r/min]		3000	3000	3000	3000	3000	3000	3000
Peak Torque [Nm]		1.92	1.92	3.81	3.81	5.73	7.17	9.6
Peak Current [A]		31	19.6	61.7	31	49.3	59	87
Max Speed [r/min]		4000	4000	4000	4000	4000	3500	3500
Torque Const [Nm/A]		0.064	0.107	0.064	0.127	0.127	0.126	0.11
Voltage Const [V/krpm]		4.1	6.9	4.1	8.3	8.3	8.4	7.6
Resistance [Ω]		0.18	0.47	0.07	0.28	0.17	0.09	0.049
Inductance [mH]		0.33	0.92	0.14	0.52	0.34	0.38	0.25
Inertia [kgm^2*10^{-4}]	Standard	0.29	0.29	0.58	0.58	0.83	1.5	1.8
	With Brake	0.3	0.3	0.59	0.59	0.84	1.65	1.95
Encoder		2500-Line/17-bit Incremental Encoder						
Structure		Totally Enclosed, Natural Cooling(IP rating: IP65)						
Weight (Kg)	Standard	1.03	1.03	1.32	1.32	1.59	2.21	2.6
	With Brake	1.38	1.38	1.67	1.67	2	2.79	3.2
Permissible Load for the Shaft	L [mm]	22.5	27	27	27	27	27	27
	Radial [N]	254	254	254	254	254	392	392
	Thrust [N]	74	74	74	74	74	147	147

The pin assignment of 17-bit encoder

Pin	Name
1	GND
2	5V
3	0V
4	SD+
5	SD-
6	BAT+
7	BAT-

The pin assignment of 2500-Line encoder

Pin	Name	Pin	Name
1	PE	5	Z-
2	+5V	6	HU+
3	GND	8	HU-
9	EA+	10	HV+
13	EA-	12	HV-
4	EB+	11	HW+
14	EB-	15	HW-
7	Z+		

• Dimensions

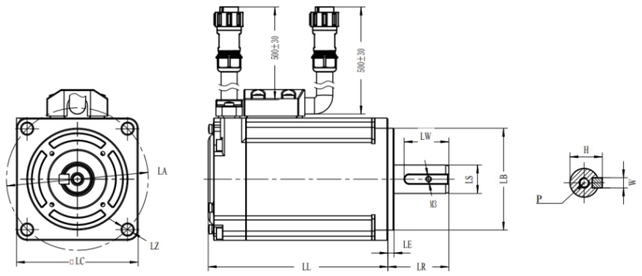

Motor Series	LC (mm)	LZ (mm)	LA (mm)	LS (mm)	LB (mm)	LL (mm)	LR (mm)	LE (mm)	LW (mm)	W (mm)	H (mm)	TP (mm)
ELVM6020V24FH-**	60	Φ5.5	Φ70	Φ14	Φ50	71.6	30	2.5	22	5	16	M3 ↧12
ELVM6020V24EH-**	60	Φ5.5	Φ70	Φ14	Φ50	100.9	30	2.5	22	5	16	M3 ↧12
ELVM6020V48FH-**	60	Φ5.5	Φ70	Φ14	Φ50	71.6	30	3	22	5	16	M5 ↧12
ELVM6020V48EH-**	60	Φ5.5	Φ70	Φ14	Φ50	100.9	30	3	22	5	16	M5 ↧12
ELVM6040V24FH-**	60	Φ5.5	Φ70	Φ14	Φ50	88.6	30	3	22	5	16	M5 ↧12
ELVM6040V24EH-**	60	Φ5.5	Φ70	Φ14	Φ50	117.9	30	3	22	5	16	M5 ↧12
ELVM6040V48FH-**	60	Φ5.5	Φ70	Φ14	Φ50	88.6	30	3	22	5	16	M5 ↧12
ELVM6040V48EH-**	60	Φ5.5	Φ70	Φ14	Φ50	117.9	30	3	22	5	16	M5 ↧12
ELVM6060V48FH-**	60	Φ5.5	Φ70	Φ14	Φ50	108.6	30	3	22	5	16	M5 ↧12
ELVM6060V48EH-**	60	Φ5.5	Φ70	Φ14	Φ50	137.9	30	3	22	5	16	M5 ↧12
ELVM8075V48FH-**	80	Φ6.6	Φ90	Φ19	Φ70	90.9	35	3	25	6	21.5	M5 ↧12
ELVM8075V48EH-**	80	Φ6.6	Φ90	Φ19	Φ70	121.9	35	3	25	6	21.5	M5 ↧12
ELVM80100V48FH-**	80	Φ6.6	Φ90	Φ19	Φ70	103.9	35	3	25	6	21.5	M5 ↧12
ELVM80100V48EH-**	80	Φ6.6	Φ90	Φ19	Φ70	134.9	35	3	25	6	21.5	M5 ↧12

Ordering Information

Motor		Drive	Cable				
Frame (mm)	Motor Model	Drive Model	Power Cable	Encoder Cable	Brake Cable	Communication Cable	Software Configuration Cable
60	ELVM6020V24FH-**	ELD2-CAN7010B ELD2-RS7010	CABLE-RZD*M*-143	CABLE-BMAD*M*-223 (Multi-turn) ——— CABLE-BMD*M*-213 (Single-turn)	×	CABLE-TX*M*-LD2	CABLE-PC-1
	ELVM6020V24EH-**				CABLE-SCD*M*-113		
	ELVM6020V48FH-**		CABLE-RZD*M*-123		×		
	ELVM6020V48EH-**				CABLE-SCD*M*-113		
	ELVM6040V24FH-**	ELD2-CAN7020B ELD2-RS7020B	CABLE-RZD*M*-253		×		
	ELVM6040V24EH-**				CABLE-SCD*M*-113		
	ELVM6040V48FH-**	ELD2-CAN7010B ELD2-RS7010	CABLE-RZD*M*-143		×		
	ELVM6040V48EH-**				CABLE-SCD*M*-113		
	ELVM6060V48FH-**	ELD2-CAN7015B ELD2-RS7015B	CABLE-RZD*M*-253		×		
	ELVM6060V48EH-**				CABLE-SCD*M*-113		
80	ELVM8075V48FH-**	ELD2-CAN7020B ELD2-RS7020B			×		
	ELVM8075V48EH-**				CABLE-SCD*M*-113		
	ELVM80100V48FH-**	ELD2-CAN7030B ELD2-RS7030B	CABLE-RZD*M*-263		×		
	ELVM80100V48EH-**				CABLE-SCD*M*-113		
Photos							

Note:
"*M*"means cable length, e.g. "0M5" means 0.5 m, "1M0" means 1 m.
The 0.5 m/1.5 m/3 m/5 m cables are always in stock.

Integrated Servo Motors

iSV2 Series

- Power range: 200W~750W
- 24VDC~60VDC
- Compact size, save mounting space
- Easy configuration

iSV2 series integrated servo motor is a 60mm & 80mm frame size servomotor integrated with a 17-bit encoder and a servo drive. At very compact size and with all components integrated, the iSV2 series can save mounting space, eliminate encoder connection & motor wiring time, reduce interference, and cut / reduce cable and labor costs.

iSV2-RS Version **iSV2-RS Series Drive**

Position/Internal velocity mode

- Rs485 based on Modbus / Pulse+Direction compatible
- Digital input and Digital output allows sink connection/source connection
- 17-bit incremental encoder
- GUI Software - MotionStudio
  Online Inertia Ratio Identification
- Motor with brake or without brake
- DIP switch for Modbus communication setting
- 120Ω on board termination resistor(DIP switch selection)

iSV2-CAN Version **iSV2-CAN Series Drive**

Profile Position/Profile Velocity/Profile Torque/Homing

- CANopen (CiA 301 & DS402)
- 4 RPDO & 4 TPDO
- Digital input and Digital output allows sink connection/source connection
- 17-bit incremental encoder
- GUI Software - MotionStudio
  Online Inertia Ratio Identification
- Motor with brake or without brake
- DIP switch for CAN communication setting
- 120Ω on board termination resistor(DIP switch selection)

Part Numbers

iSV2 – CAN 6040 V48 G

Series Num	
iSV2	servo motor (24-60VDC)

Command Source	
RS	RS485(Modbus RTU)/Pulse+Dir
CAN	CANopen

Maximum Output Power	
6020	60mm frame size, 200W
6040	60mm frame size, 400W
8075	80mm frame size, 750W

Voltage	
24	24V
48	48V

H	No brake
G	With brake

Specifications

Servo drive series	iSV2-RS6020V24* iSV2-CAN6020V24*	iSV2-RS6020V48* iSV2-CAN6020V48*	iSV2-RS6040V48* iSV2-CAN6040V48*	iSV2-RS8075V48* iSV2-CAN8075V48*
Modes of operation(iSV2-RS)	Position/Internal Velocity			
Modes of operation(iSV2-CAN)	Profile Position/Profile Velocity/Profile Torque/Homing			
Command source(iSV2-RS)	Pulse+Direction/Modbus RTU/16 PR paths			
Command source(iSV2-CAN)	CANopen			
Inputs/Outputs	4 programmable digital inputs， allow sink input/source input, within the range from 12VDC to 24VDC, 30mA 2 programmable single-end outputs			
Feedback Supported	17-bit Incremental			
Communication	CANopen/Modbus RTU(RS485)			

Drive model	iSV2-RS6020V24* iSV2-CAN6020V24*	iSV2-RS6020V48* iSV2-CAN6020V48*	iSV2-RS6040V48* iSV2-CAN6040V48*	iSV2-RS8075V48* iSV2-CAN8075V48*
Input Voltage(VDC)	24-60	24-60	24-60	24-60
Rated Power(W)	200	200	400	750
Rated Torque(Nm)	0.64	0.64	1.27	2.4
Peak Torque(Nm)	1.92	1.92	3.81	7.2
Rated Speed(rpm)	3000	3000	3000	3000
Peak Speed(rpm)	4000	4000	4000	4000
Rated Voltage(VDC)	24	48	48	48
Weight(Kg)	0.93(1.32)	1.1(1.4)	1.26(1.65)	2.52(3.19)
Continuous Current(Arms)	11	6.5	10	19
Peak Current(A)	34	20	28	57
Back EMF Const(V/krpm)	3.6	6.3	8.3	8.6
Inertia($kg*m^2*10^{-4}$)	0.29	0.29	0.58	1.5
Logic Signal Current(mA)	10	10	10	10
Isolation Resistance(MΩ)	100	100	100	100
Control method	IGBT PWM sinusoidal Wave Drive			
Overload	250% ~ 300%			
Brake resistor	External connection			
Protection rank	IP20			

Figures in ( )represent the weight with brake.

Motion Studio - GUI Software

- Information such as parameter setting and monitoring are consolidated easily just by connecting a personal computer to servo drive.
- Display parameter setting in list or visual formats, and set parameters by selecting from the drop down list
- Adjust control gain finely on the [Tuning] window manually for better performance.
- State monitoring and 4 channel wave showing with high accuracy.
- Easy to set the values of object dictionary for drive with CANopen version.
- Easy to read/save/download/compare/reset all parameters.

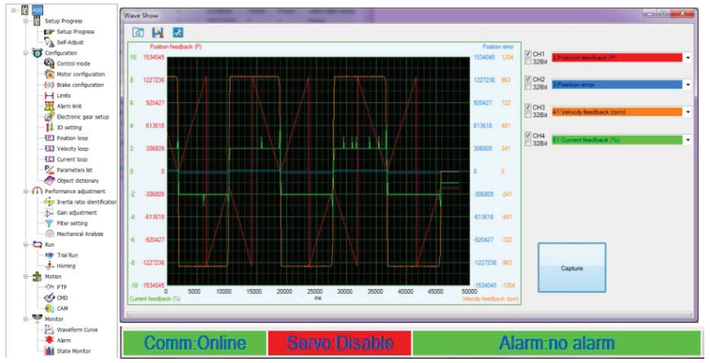

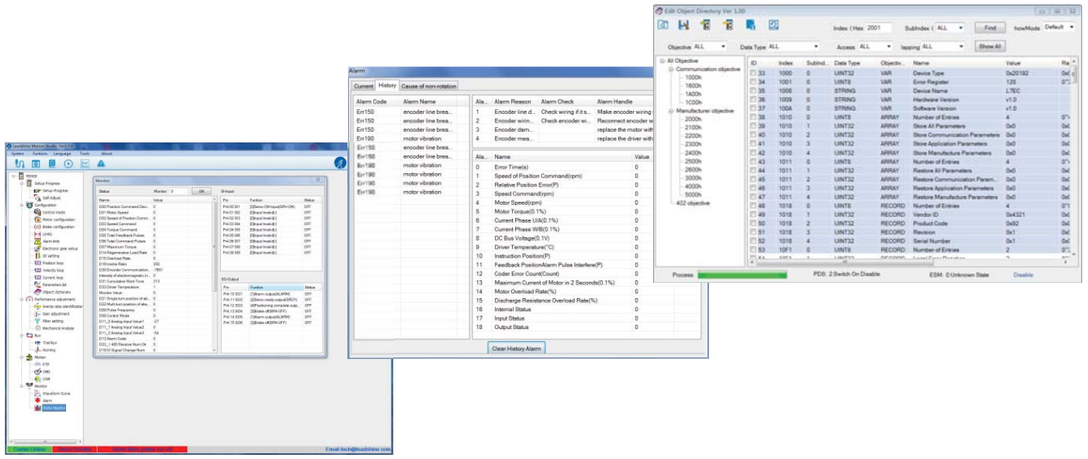

Servo Motor Connectors and Terminals

External Regenerative Resistor

Drive	Recommend resister value(Ω)	Recommend resister power(W)
iSV2-CAN6020V48	10	50
iSV2-CAN6040V48	10	50
iSV2-CAN8075V48	10	100

Mechanical Dimensions

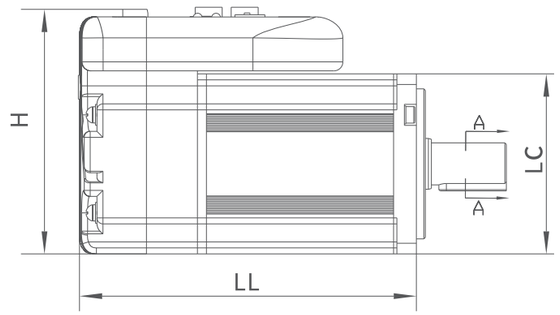

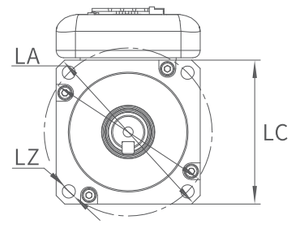

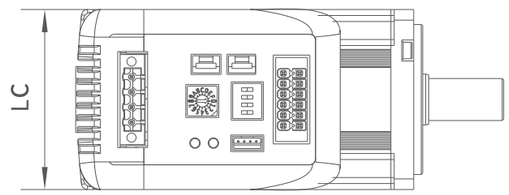

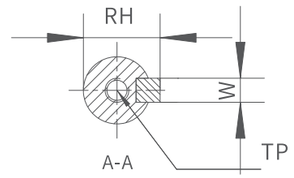

Model	LC (mm)	LL (mm)	H (mm)	LA (mm)	LZ (mm)	TP (mm)	RH (mm)	W (mm)
iSV2-CAN6020V24H iSV2-RS6020V24H	60	95.7	79	Φ70	Φ5.5	↧12	16	5
iSV2-CAN6020V24G iSV2-RS6020V24G		124.7						
iSV2-CAN6020V48H iSV2-RS6020V48H		95.7						
iSV2-CAN6020V48G iSV2-RS6020V48G		124.7						
iSV2-CAN6040V48H iSV2-RS6040V48H		112.7						
iSV2-CAN6040V48G iSV2-RS6040V48G		141.7						
iSV2-CAN8075V48H iSV2-RS8075V48H	80	128.8	100	Φ90	Φ6.6		21.5	6
iSV2-CAN8075V48G iSV2-RS8075V48G		160.3						

Figures in ( )represent the dimensions with brake.

Torque-Speed Curve of iSV2 Motor

- **200W motor(iSV2-**20)**

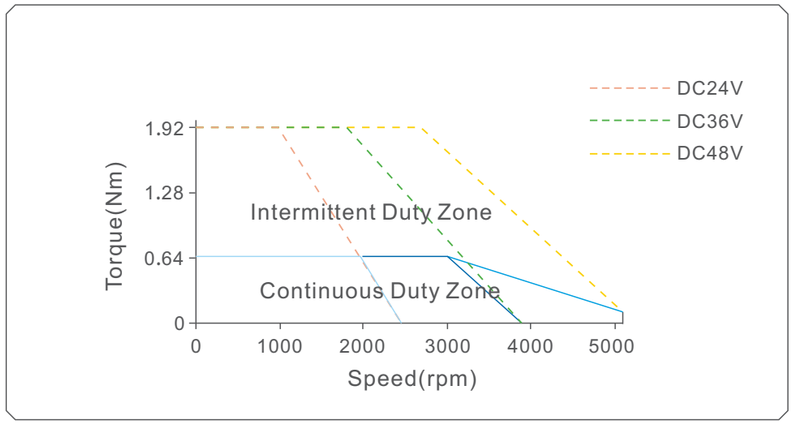

- **400W motor(iSV2-**40)**

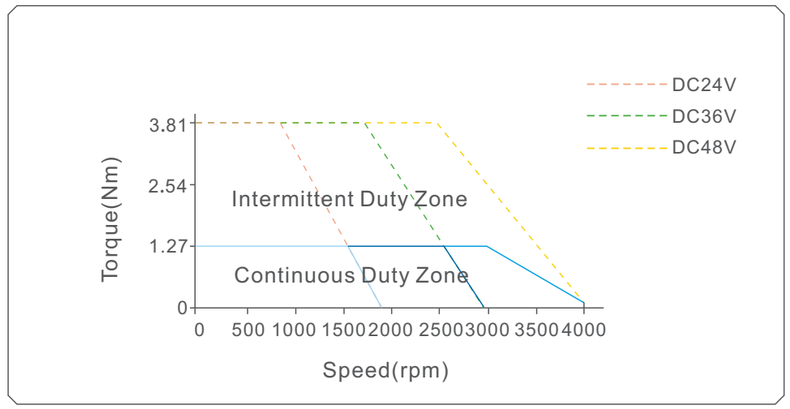

- **750W motor(iSV2-**75)**

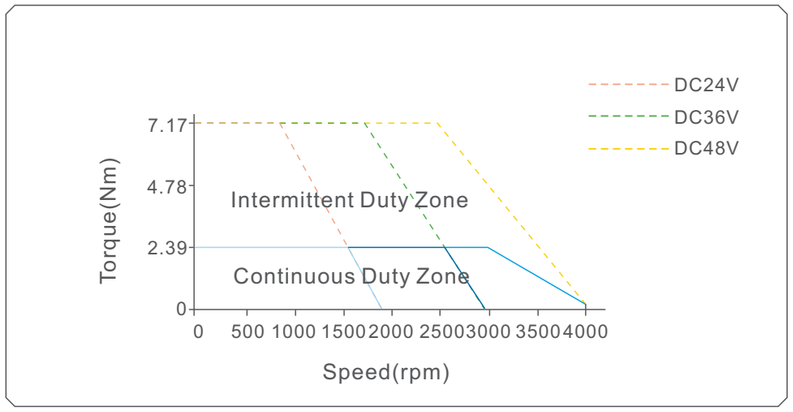

Drive Connections

- **iSV2-RS**

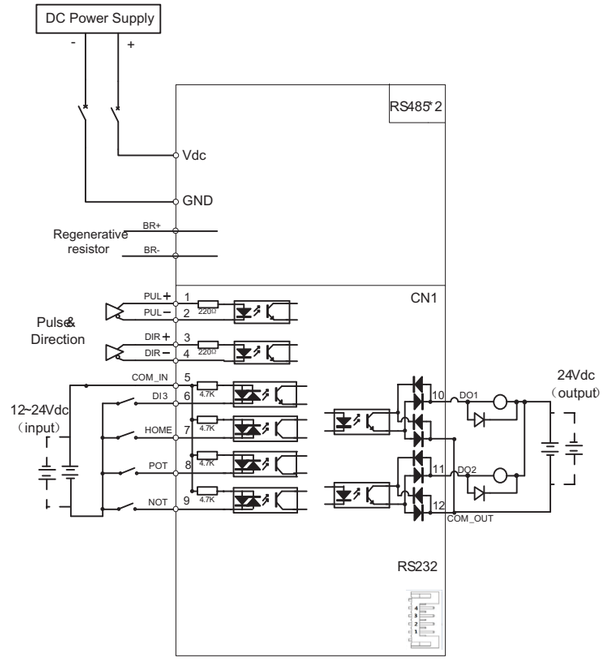

- **iSV2-CAN**

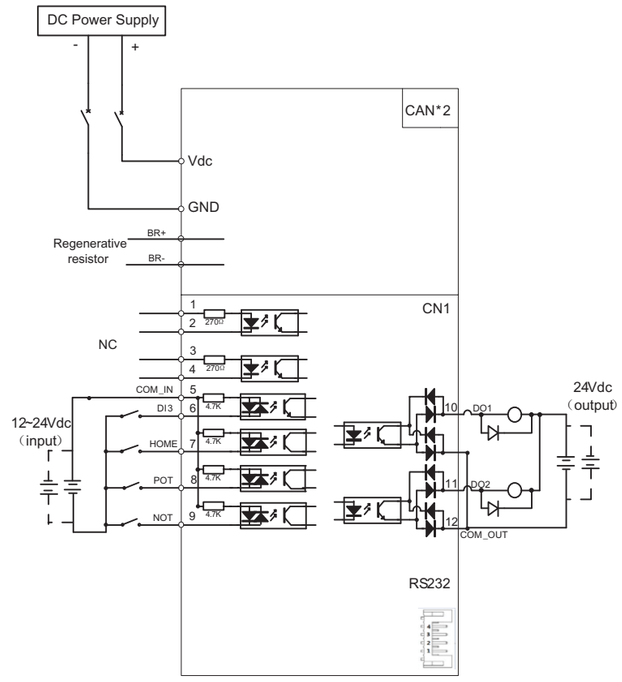

Integrated Servo Motors

iSV Series

- Highly Integrated, Servo motor + advanced DSP servo drive
- Lower cable cost
- Support step & direction, commands
- Built-in pulse generator for the tuning and self-test
- Compact size, Save mounting space

Leadshine's iSV series integrated servo motors are one of the most compact servo systems available on the market. An iSV integrated servo has a servo motor (PMSM or BLDC optional) and an advanced DSP servo drive. At very compact size and with all components integrated, the iSV series servos can save mounting space, eliminate encoder connection and motor wiring time, increase reliability, and lower cable and labor cost. The drive takes step & direction, commands, and is capable of outputting in position and fault signals back to the master controller or external devices for complete system controls.

Part Numbers

iSV – B 23 090 T – S21

Series Num	
iSV	iSV Series

Motor Type	
B	Brushless

Frame Size	
17	NEMA17
23	NEMA23
34	NEMA34

Rated Output Power	
090	90W
130	130W
180	180W

Encoder	
T	17-bit incremental magnetic encoder

Motor shaft	
S21	shaft length 21mm, shaft diameter 8mm

Specifications

Part Number	iSV-B23090T-S21	iSV-B23130T-S21	iSV-B23180T-S21
Rated Power(W)	90	130	180
Rated Torque(Nm)	0.30	0.45	0.6
Peak Torque(Nm)	0.80	1.1	1.1
Rated Speed(rpm)	3000	3000	3000
PeakSpeed(rpm)	4000	4000	4000
Rated Voltage(VDC)	36	36	36
Weight(Kg)	0.95	1.25	1.54

Mechanical Dimensions

- **iSV-B23090T-S21**

Units: mm 1 inch = 25.4 mm

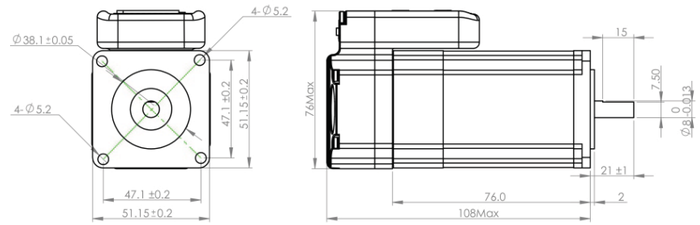

- **iSV-B23130T-S21**

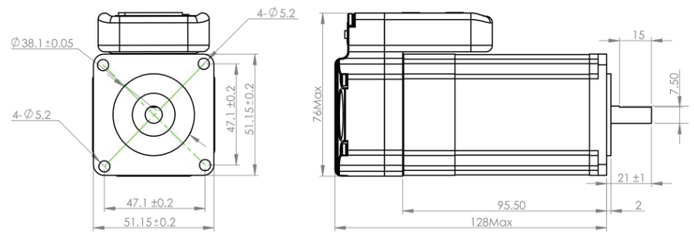

- **iSV-B23180T-S21**

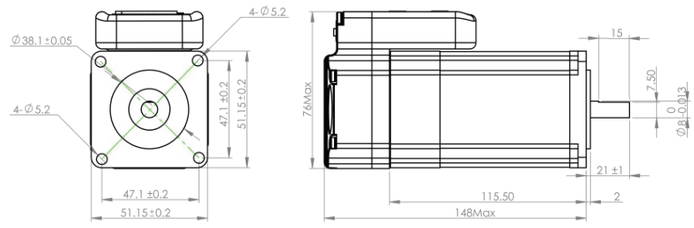

Power Supplies

- 220VAC ± 10% or 110 VAC ± 10%
- Higher Reliability and mass production
- High efficiency, low temperature rising

Features

- 1.8 or 3 times overload
- Compact Size, Light in Weight
- Use Switch to select input voltage 220VAC ± 10%
- Over-current, Over-voltage, Low-voltage Protections
- Big Power with High Efficiency
- CE and RoHS

Electrical Specifications

Model	Output Voltage (VDC)	Continuous Current(A)	Peak Current(A)	Input Voltage	Power(W)	Dimensions (mm)	Weight(Kg)
SPS2410(V3.0)	24	10	30	220VAC±10%	240	199*110*50	0.8
SPS3611(V3.0)	36	11	33		400	215*115*30	0.6
SPS488(V3.0)	48	8.3	24.9		400	215*115*30	0.6
SPS606(V3.0)	60	6.7	20.1		400	215*115*30	0.6

Mechanical Dimensions

(unit: mm, 1inch=25.4mm)

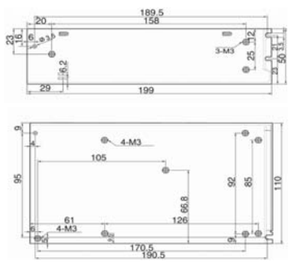

SPS2410(V2.0)

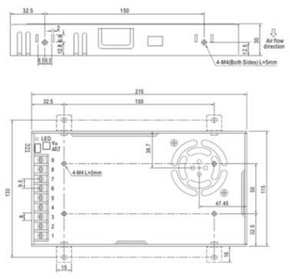

SPS3611(V2.0)/SPS488(V2.0)/SPS607(V2.0)